NELSON ELECTRIC COMPANY
COMMERCIAL – RESIDENTIAL - INDUSTRIAL

NV LIC. #0016697
CA LIC. #322768
PH: 358-0643
FAX: 358-0674

PART IA –TECHNICAL PROPOSAL

RFP TITLE: LAXALT CHAMBERS ROOM AUDIO-VIDEO SYSTEM REPLACEMENT

RFP: 3512

VENDOR NAME: NELSON ELECTRIC COMPANY, INC.

ADDRESS: 1410 FREEPORT BLVD., SPARKS, NV 89431

OPENING DATE: DECEMBER 21, 2017

OPENING TIME: 2:00 PM

NELSON ELECTRIC CO., INC.
COMMERCIAL - RESIDENTIAL - INDUSTRIAL
PH: 358-0643
FAX: 358-0674
NV Lic #0067

Scope of Work

RFP 3512

LAXALT CHAMBERS ROOM
AUDIO-VIDEO SYSTEM REPLACEMENT

1. Remove existing audio visual and video conferencing system located in the Laxalt Building Chambers Room including devices, equipment and cabling.

2. Install new audio visual and video conferencing system in the Laxalt Building Chambers Room including devices, equipment and cabling.

3. Provide new video conferencing mobile "cart" to be used in the Nevada Division of Tourism's Las Vegas office.

4. Configure, program and integrate all equipment so that the system can be easily controlled by a single operator using a touchscreen control panel.

5. Test, commission and demonstrate the entire system to the Owner.

6. Provide training to the owner on the operation and maintenance of the system.

7. Provide on-going maintenance of the system for a period of three (3) year after Substantial Completion of the project.

Nelson Electric Co., Inc.
1410 Freeport Blvd., Sparks, NV 89431

VENDOR INFORMATION SHEET FOR RFP 3512

Vendor Shall:

A) Provide all requested information in the space provided next to each numbered question. The information provided in Sections V1 through V6 shall be used for development of the contract;

B) Type or print responses; and

C) Include this Vendor Information Sheet in Section III of the Technical Proposal.

V1	Company Name	Nelson Electric Co., Inc.

V2	Street Address	1410 Freeport Blvd.

V3	City, State, ZIP	Sparks, NV 89431

V4	Telephone Number		
	Area Code: 775	Number: 358-0643	Extension:

V5	Facsimile Number		
	Area Code: 775	Number: 3588-0674	Extension:

V6	Toll Free Number		
	Area Code:	Number:	Extension:

V7	***Contact Person for Questions / Contract Negotiations, including address if different than above***
	Name: Justin Nelson
	Title: Systems Manager
	Address: 1410 Freeport Blvd., Sparks, NV 89431
	Email Address: JustinN@nelsonelectric.net

V8	Telephone Number for Contact Person		
	Area Code: 775	Number: 358-0643	Extension:

V9	Facsimile Number for Contact Person		
	Area Code: 775	Number: 358-0674	Extension:

V10	***Name of Individual Authorized to Bind the Organization***	
	Name: Lisa Teglia	Title: President

V11	Signature ***(Individual shall be legally authorized to bind the vendor per NRS 333.337)***	
	Signature: Lisa M. Teglia	Date: 12/20/17

NV LIC. #0016697
CA LIC. #322768
PH: 358-0643
FAX: 358-0674

COMPANY BACKGROUND AND REFERENCES

VENDOR INFORMATION

Vendors shall provide a company profile in the table format below.

Question	Response
Company name:	NELSON ELECTRIC COMPANY, INC.
Ownership (sole proprietor, partnership, etc.):	CORPORATION
State of incorporation:	NEVADA
Date of incorporation:	09/29/1978
# of years in business:	45
List of top officers:	LISA TEGLIA, PRESIDENT
Location of company headquarters, to include City and State:	1410 FREEPORT BLVD., SPARKS, NV 89431
Location(s) of the office that shall provide the services described in this RFP:	SAME
Number of employees locally with the expertise to support the requirements identified in this RFP:	10
Number of employees nationally with the expertise to support the requirements in this RFP:	10
Location(s) from which employees shall be assigned for this project:	1410 FREEPORT BLVD., SPARKS, NV 89431

A Nevada-based business may apply for a five percent (5%) preference on its proposal. This preference may apply if a business has its principal place of business within Nevada. This preference cannot be combined with any other preference, granted for the award of a contract using federal funds, or granted for the award of a contract procured on a multi-state basis. To claim this preference a business must submit a letter with its proposal showing that it qualifies for the preference.

Please be advised, pursuant to NRS 80.010, a corporation organized pursuant to the laws of another state shall register with the State of Nevada, Secretary of State's Office as a foreign corporation before a contract can be executed between the State of Nevada and the awarded vendor, unless specifically exempted by NRS 80.015.

The selected vendor, prior to doing business in the State of Nevada, shall be appropriately licensed by the State of Nevada, Secretary of State's Office pursuant to NRS76. Information regarding the Nevada Business License can be located at http://nvsos.gov.

Question	Response
Nevada Business License Number:	NV19781008753
Legal Entity Name:	NELSON ELECTRIC COMPANY, INC.

Is "Legal Entity Name" the same name as vendor is doing business as?

Yes	X	No	

If "No", provide explanation.

Has the vendor ever been engaged under contract by any State of Nevada agency?

Yes	X	No	

If "Yes", complete the following table for each State agency for whom the work was performed. Table can be duplicated for each contract being identified.

Question	Response
Name of State agency:	STATE OF NEVADA PUBLIC WORKS BOARD
State agency contact name:	
Dates when services were performed:	MULTIPLE
Type of duties performed:	ELECTRICAL/LOW VOLTAGE
Total dollar value of the contract:	UP TO $10M

Are you now or have you been within the last two (2) years an employee of the State of Nevada, or any of its agencies, departments, or divisions?

Yes		No	X

If "Yes", please explain when the employee is planning to render services, while on annual leave, compensatory time, or on their own time?

If you employ (a) any person who is a current employee of an agency of the State of Nevada, or (b) any person who has been an employee of an agency of the State of Nevada within the past two (2) years, and if such person shall be performing or producing the services which you shall be contracted to provide under this contract, you shall disclose the identity of each such person in your response to this RFP, and specify the services that each person shall be expected to perform.

Disclosure of any significant prior or ongoing contract failures, contract breaches, civil or criminal litigation in which the vendor has been alleged to be liable or held liable in a matter involving a contract with the State of Nevada or any other governmental entity. Any pending claim or litigation occurring within the past six (6) years which may adversely affect the vendor's ability to perform or fulfill its obligations if a contract is awarded as a result of this RFP shall also be disclosed.

Does any of the above apply to your company?

Yes		No	X

If "Yes", please provide the following information. Table can be duplicated for each issue being identified.

Question	Response	
Date of alleged contract failure or breach:	N/A	
Parties involved:		
Description of the contract failure, contract breach, or litigation, including the products or services involved:		
Amount in controversy:		
Resolution or current status of the dispute:		
If the matter has resulted in a court case:	Court	Case Number
Status of the litigation:		

Vendors shall review and provide if awarded a contract the insurance requirements as specified in ***Attachment D, Insurance Schedule for RFP 3512.***

Company background/history and why vendor is qualified to provide the services described in this RFP. Limit response to no more than five (5) pages.

Provide a brief description of the length of time vendor has been providing services described in this RFP to the public and/or private sector.

Financial information and documentation to be included in accordance with ***Section 8.5, Part III – Confidential Financial Information***.

Dun and Bradstreet Number : 06-782-4847

NV LIC. #0016697
CA LIC. #372768
PH: 358-0643
FAX: 358-0674

Federal Tax Identification Number: 88-0151950

SUBCONTRACTOR INFORMATION

Subcontractors are defined as a third party, not directly employed by the contractor, who shall provide services identified in this RFP. This does not include third parties who provide support or incidental services to the contractor.

Does this proposal include the use of subcontractors?

Yes		No	

If "Yes", vendor shall:

Identify specific subcontractors and the specific requirements of this RFP for which each proposed subcontractor shall perform services.

If any tasks are to be completed by subcontractor(s), vendors shall:

Describe how the work of any subcontractor(s) shall be supervised, channels of communication shall be maintained and compliance with contract terms assured; and

Describe your previous experience with subcontractor(s).

Provide the same information for any proposed subcontractors as requested in Section 3.1, Vendor Information.

Vendor shall not allow any subcontractor to commence work until all insurance required of the subcontractor is provided to the vendor.

Vendor shall notify the using agency of the intended use of any subcontractors not identified within their original proposal and provide the information originally requested in the RFP in Section 3.2, Subcontractor Information. ***The vendor shall receive agency approval prior to subcontractor commencing work.***

State of Nevada
Department Administration
Purchasing Division
515 E. Musser Street, Suite 300
Carson City, NV 89701

Brian Sandoval
Governor

Jeffrey Haag
Administrator

SUBJECT:	Amendment 2 to Request for Proposal 3512
RFP TITLE:	Laxalt Chambers Room Audio-Visual System Replacement
DATE OF AMENDMENT:	December 8, 2017
DATE OF RFP RELEASE:	November 15, 2017
OPENING DATE:	December 21, 2017
OPENING TIME:	2:00 PM
CONTACT:	Annette Morfin, Procurement Staff Member

The following shall be a part of RFP ***3512.*** If a vendor has already returned a proposal and any of the information provided below changes that proposal, please submit the changes along with this amendment. You need not re-submit an entire proposal prior to the opening date and time.

This is in regards to Question 7 on Amendment 1. This is additional information.

1. Bid Documents - Section 2.35 - How is the preview video to get to the wired touchscreen and the wireless touchscreen controllers?

   The manufacturer of the HDBaseT cameras (Vaddio) has indicated that the cameras can simultaneously stream to the HDBaseT card on the Crestron matrix switcher and to the touch screen controllers via an IP stream. We have not had an opportunity to test this functionality and realize that there may be limitations on the available bandwidth between the control touch screens and the cameras. For bid purposes, assume that preview video is not required on the touch screens. Camera control is still required via the touch screens including pan, tilt, zoom and preset selection. After installation, if it is determined that preview video can be included on the touch screens, the contractor will be asked to provide a proposal to add this functionality.

ALL ELSE REMAINS THE SAME FOR RFP 3512.

Vendor must sign and return this amendment with proposal submitted.

Vendor Name:	NELSON ELECTRIC COMPANY, INC.		
Authorized Signature:	Lisa M. Teglia		
Title:	PRESIDENT	Date:	12/20/17

This document must be submitted in the "State Documents" section of vendors' technical proposal.

ATTACHMENT A – CONFIDENTIALITY AND CERTIFICATION OF INDEMNIFICATION

Submitted proposals, which are marked "confidential" in their entirety, or those in which a significant portion of the submitted proposal is marked "confidential" **shall not** be accepted by the State of Nevada. Pursuant to NRS 333.333, only specific parts of the proposal may be labeled a "trade secret" as defined in NRS 600A.030(5). All proposals are confidential until the contract is awarded; at which time, both successful and unsuccessful vendors' technical and cost proposals become public information.

In accordance with the submittal instructions of this RFP, vendors are requested to submit confidential information in separate files marked "**Part IB Confidential Technical**" and "**Part III Confidential Financial**".

The State shall not be responsible for any information contained within the proposal. If vendors do not comply with the labeling and packing requirements, proposals shall be released as submitted. In the event a governing board acts as the final authority, there may be public discussion regarding the submitted proposals that shall be in an open meeting format, the proposals shall remain confidential.

By signing below, I understand it is my responsibility as the vendor to act in protection of the labeled information and agree to defend and indemnify the State of Nevada for honoring such designation. I duly realize failure to so act shall constitute a complete waiver and all submitted information shall become public information; additionally, failure to label any information that is released by the State shall constitute a complete waiver of any and all claims for damages caused by the release of the information.

This proposal contains Confidential Information, Trade Secrets and/or Proprietary information.

Please initial the appropriate response in the boxes below and provide the justification for confidential status.

Part IB – Confidential Technical Information			
YES		NO	X
Justification for Confidential Status			

Part III – Confidential Financial Information			
YES		NO	X
Justification for Confidential Status			

NELSON ELECTRIC COMPANY, INC.
Company Name

Lisa M. Teglia
Signature

LISA M. TEGLIA
Print Name

12/20/17
Date

This document shall be submitted in Section IV of vendor's technical proposal

ATTACHMENT B – VENDOR CERTIFICATIONS

Vendor agrees and shall comply with the following:

(1) Any and all prices that may be charged under the terms of the contract do not and shall not violate any existing federal, State or municipal laws or regulations concerning discrimination and/or price fixing. The vendor agrees to indemnify, exonerate and hold the State harmless from liability for any such violation now and throughout the term of the contract.

(2) All proposed capabilities can be demonstrated by the vendor.

(3) The price(s) and amount of this proposal have been arrived at independently and without consultation, communication, agreement or disclosure with or to any other contractor, vendor or potential vendor.

(4) All proposal terms, including prices, shall remain in effect for a minimum of 180 days after the proposal due date. In the case of the awarded vendor, all proposal terms, including prices, shall remain in effect throughout the contract negotiation process.

(5) No attempt has been made at any time to induce any firm or person to refrain from proposing or to submit a proposal higher than this proposal, or to submit any intentionally high or noncompetitive proposal. All proposals shall be made in good faith and without collusion.

(6) All conditions and provisions of this RFP are deemed to be accepted by the vendor and incorporated by reference in the proposal, except such conditions and provisions that the vendor expressly excludes in the proposal. Any exclusion shall be in writing and included in the proposal at the time of submission.

(7) Each vendor shall disclose any existing or potential conflict of interest relative to the performance of the contractual services resulting from this RFP. Any such relationship that might be perceived or represented as a conflict shall be disclosed. By submitting a proposal in response to this RFP, vendors affirm that they have not given, nor intend to give at any time hereafter, any economic opportunity, future employment, gift, loan, gratuity, special discount, trip, favor, or service to a public servant or any employee or representative of same, in connection with this procurement. Any attempt to intentionally or unintentionally conceal or obfuscate a conflict of interest shall automatically result in the disqualification of a vendor's proposal. An award shall not be made where a conflict of interest exists. The State shall determine whether a conflict of interest exists and whether it may reflect negatively on the State's selection of a vendor. The State reserves the right to disqualify any vendor on the grounds of actual or apparent conflict of interest.

(8) All employees assigned to the project are authorized to work in this country.

(9) The company has a written equal opportunity policy that does not discriminate in employment practices with regard to race, color, national origin, physical condition, creed, religion, age, sex, marital status, sexual orientation, developmental disability or handicap.

(10) The company has a written policy regarding compliance for maintaining a drug-free workplace.

(11) Vendor understands and acknowledges that the representations within their proposal are material and important, and shall be relied on by the State in evaluation of the proposal. Any vendor misrepresentations shall be treated as fraudulent concealment from the State of the true facts relating to the proposal.

(12) Vendor shall certify that any and all subcontractors comply with Sections 7, 8, 9, and 10, above.

(13) The proposal shall be signed by the individual(s) legally authorized to bind the vendor per NRS 333.337.

NELSON ELECTRIC COMPANY, INC.

Vendor Company Name

Lisa M. Teglia

Vendor Signature

LISA M. TEGLIA — 12/20/17

Print Name — Date

This document shall be submitted in Section IV of vendor's technical proposal

Question	Response	
dispute:		
If the matter has resulted in a court case:	Court	Case Number
Status of the litigation:		

3.1.8 Vendors shall review and provide if awarded a contract the insurance requirements as specified in ***Attachment D, Insurance Schedule for RFP 3512.***

3.1.9 Company background/history and why vendor is qualified to provide the services described in this RFP. Limit response to no more than five (5) pages.

3.1.10 Provide a brief description of the length of time vendor has been providing services described in this RFP to the public and/or private sector.

3.1.11 Financial information and documentation to be included in accordance with ***Section 8.5, Part III – Confidential Financial Information***.

3.1.11.1 Dun and Bradstreet Number

3.1.11.2 Federal Tax Identification Number

3.2 SUBCONTRACTOR INFORMATION

Subcontractors are defined as a third party, not directly employed by the contractor, who shall provide services identified in this RFP. This does not include third parties who provide support or incidental services to the contractor.

3.2.1 Does this proposal include the use of subcontractors?

Yes		No	X

If "Yes", vendor shall:

3.2.1.1 Identify specific subcontractors and the specific requirements of this RFP for which each proposed subcontractor shall perform services.

3.2.1.2 If any tasks are to be completed by subcontractor(s), vendors shall:

A. Describe how the work of any subcontractor(s) shall be supervised, channels of communication shall be maintained and compliance with contract terms assured; and

B. Describe your previous experience with subcontractor(s).

3.2.1.3 Provide the same information for any proposed subcontractors as requested in ***Section 3.1, Vendor Information***.

PROPOSED STAFF RESUME FOR RFP 3512

A resume must be completed for all proposed prime contractor staff and proposed subcontractor staff.

Company Name Submitting Proposal:	***Nelson Electric Co.***

Check the appropriate box if the proposed individual is prime contractor staff or subcontractor staff			
Contractor:	***Staff***	**Subcontractor:**	

The following information requested pertains to the individual being proposed for this project.			
Name:	***Brian Smith***	**Key Personnel: (Yes/No)**	***Yes***
Individual's Title	***Systems Project Manager***		
# of Years in Classification:	***3***	**# of Years with Firm:**	***5***

BRIEF SUMMARY OF PROFESSIONAL EXPERIENCE

Information should include a brief summary of the proposed individual's professional experience.

Project Manager in the Audio Visual Market for 15 years duties included design and programming.

RELEVANT EXPERIENCE

Information required should include: timeframe, company name, company location, position title held during the term of the contract/project and details of contract/project.

(1) October 2017 Washoe County School District Project: Washoe County School Board Dais Audio Video System Upgrade.
Title: Project Manager, Crestron Controlled Audio Video System for School Board Dais Installation
Site Contact: Tony McMillan Capital Projects Construction Director TMcMillen@washoeschools.net

(2) November 2015 University of Nevada Reno Project: Pennington Student Achievement Center
Title: Project Manager, Crestron Smart Classroom and Teleconference system Installation.
Site Contact: Greg Gardella University of Nevada TLT Manager greg@unr.edu

(3) July 2016 and July 2017 University of Nevada Cooperative Extension Project: Classroom A &B AV Upgrade.
Title: Project Manger and Designer, Crestron Smart Classroom and Teleconference system Installation
Site Contact: Melody Richards Manger of Facilities richardsm@unce.unr.edu

(4) July 2014 City of Reno Council Chambers Audio Video Upgrade
Title: Project Manager, Crestron Controlled Audio Video System for City Council Dais Installation.
Site Contact: Alan Tryon Retired, New Contact: Kerrie Koski, P.E., Engineering Manager <koskik@reno.gov>

EDUCATION

Information required should include: institution name, city, state, Degree and/or Achievement and date completed/received.

Wooster High School Reno, Nevada Class of 81

CERTIFICATIONS

Information required should include: type of certification and date completed/received.

- Peavey Media Matrix Programmer Certified 1999
- Bogen Quantum IP Programmer Certified 2014
- QSC Q-SYS Core Programmer Level 1 Certified 2017

REFERENCES

A maximum of three (3) references are required, including name, title, organization, phone number, fax number and email address.

1, John Hood Owner The Farm AV Manufactures Rep. Firm (916) 705-8371 johnh@thefarmav.com

2. Nathan Barlow General Manager West Coast Audio Video 775-745-2354 Nathan@westcoastav.com

3. Dean Parker Director of Facilities Peppermill Resorts, Retired 775-232-4768 tyster@att.net

PROPOSED STAFF RESUME FOR RFP 3512

A resume must be completed for all proposed prime contractor staff and proposed subcontractor staff.

Company Name Submitting Proposal:	***Nelson Electric Co.***

Check the appropriate box if the proposed individual is prime contractor staff or subcontractor staff.			
Contractor:	***Staff***	**Subcontractor:**	

The following information requested pertains to the individual being proposed for this project.			
Name:	***Mark Moser***	**Key Personnel: (Yes/No)**	***Yes***
Individual's Title	***Systems Programmer***		
# of Years in Classification:	***40***	**# of Years with Firm:**	***1***

BRIEF SUMMARY OF PROFESSIONAL EXPERIENCE

Information should include a brief summary of the proposed individual's professional experience.

Over 40 years with Audio/Video and Information Technology Systems as a Division Manager, Systems Design Engineer, Programmer, Installer, Service Manager, Service Technician, Audio Engineer (Live and Recording), and Camera Operator.

RELEVANT EXPERIENCE

Information required should include: timeframe, company name, company location, position title held during the term of the contract/project and details of contract/project.

September 2017 – West Coast Audio Visual (Systems Engineer), UNR Co-Op, Video Conference room with interactive displays with annotation.

December 2016 – West Coast Audio Visual (Systems Engineer), Anthem Blue Cross (Reno), Video conference system.

March to December 2008 - Martis Camp, DSI Reno NV (AV Department Manager, Systems Engineer & Programmer), The Barn Activity Center. Designed, programmed and installed multiple display system for an "any source anywhere" concept. Large theater design and install 15K HD projector including the 7.1 surround sound system.

June 2007 to March 2008 –DSI Reno NV (AV Department Manager, Systems Engineer & Programmer), Fernley Court House, Dias Audio, video projector system and conference rooms.

EDUCATION

Information required should include: institution name, city, state, degree and/or Achievement and date completed/received.

High School Diploma, Washoe High School, 1994

Microsoft Windows NT 4.0 Server MCSE Courses – 5/1999 – 7/1999

Microsoft SQL Server 7.0 & VB 6.0 – 8/2000 – 11/2000

Microsoft Windows 2003 Server MCSE Courses, 6/2005 – 10/2005

CERTIFICATIONS

Information required should include: type of certification and date completed/received.

Crestron DM Certified Engineer (DMC-E-4K) - 2/10-12/2016

Crestron - CTI-P101 Foundations of Crestron Programming - 4/13-15/2016

Crestron - CTI-P201 Core System Programming – 3/01-03/2017

Crestron - Smart Graphics Training (CTI-SG) – 6/19-20/2017

Crestron – NVX Design and Networking (DM-NVX) – 12/11-12/2017

REFERENCES

A maximum of three (3) references are required, including name, title, organization, phone number, fax number and email address.

Scott Bergstrom
Owner
Starsound Audio, Inc.
Office: 775-331-1010, Cell: 775-287-1866

Nathan Barlow
General Manager
West Coast Audio Visual, LLC
Office: 775-284-8626, Cell: 775-745-2354

John Scherschel, D.C.
Owner
B Street Chiropractic
Office: 775-359-6500

CRESTRON

This certifies that

MARK MOSER

has successfully completed

Smart Graphics Training (CTI-SG)

06/20/2017

Date

Authorized Signature

CRESTRON

This certifies that

MARK MOSER

has successfully completed

CTI-P101 Foundations of Crestron Programming

04/15/2016

Date

Authorized Signature

CRESTRON

CRESTRON Technical Institute

This certifies that

MARK MOSER

has successfully completed

NVX Design and Networking (DM-NVX)

12/12/2017

Date

Authorized Signature

CRESTRON

This certifies that

MARK MOSER

has successfully completed

CTI-P201 Core System Programming

03/03/2017

Date

Authorized Signature

CRESTRON

This certifies that

MARK MOSER

has successfully completed

the requirements of the DigitalMedia™ Certification Program and is hereby awarded the title of

DigitalMedia Certified Engineer 4K.

02/12/2016

Date

Authorized Signature

E-4K-103-160212-3334

CRESTRON

This certifies that

MARK MOSER

has successfully completed

the requirements of the DigitalMedia™ Certification Program and is hereby awarded the title of

DigitalMedia Certified Technician 4K.

02/12/2016

Date

Authorized Signature

T-4K-103-160212-6088

awarded vendor shall provide an on-site response time of three (3) business days for system critical items during regular business hours. The awarded vendor shall provide all equipment, tools and skilled personnel to make all necessary system repairs.

2.15 PROJECT CLOSEOUT DOCUMENTATION

The awarded vendor shall submit project closeout documentation at the completion of the project. Documentation shall be bound in three (3)-ring binders and shall include cable test reports, as-built drawings, equipment manufacturer's operation and maintenance manuals, manufacturer's warranty statements, awarded vendor's guarantee and warranty statement.

2.16 PROGRAM TASKS AND ACTIVITIES

2.16.1 Design Documents: (*Refer to **Attachment H – System Drawings*** and *Refer to **Attachment I – System Specifications***) for the scope of work.

2.16.2 State Historical Preservation Office (SHPO): This work has SHPO approval.

2.16.3 Asbestos: The chambers were tested by State Buildings and Grounds and it was determined there are not asbestos containing materials present (*Refer to **Attachment J – Asbestos Report***).

2.16.4 Restrooms and Dumpster: The Laxalt building restrooms and dumpster may be used by the awarded vendor's staff.

2.16.5 Working Hours: Working hours should be considered from 8 a.m. to 5 p.m. Monday through Friday, excluding Nevada State holidays.

2.16.6 Project Schedule: Removal/installation work to begin on or about March 22, 2018 and be completed no later than May 31, 2018.

3. COMPANY BACKGROUND AND REFERENCES

3.1 VENDOR INFORMATION

3.1.1 Vendors shall provide a company profile in the table format below.

Question	Response
Company name:	Nelson Electric Co., Inc.
Ownership (sole proprietor, partnership, etc.):	Corporation
State of incorporation:	Nevada
Date of incorporation:	09/29/1978
# of years in business:	45
List of top officers:	Lisa Teglia, President
Location of company headquarters, to include City and State:	1410 Freeport Blvd. Sparks, NV 89431
Location(s) of the office that shall provide the services described in this RFP:	Same

Question	Response
Number of employees locally with the expertise to support the requirements identified in this RFP:	10
Number of employees nationally with the expertise to support the requirements in this RFP:	10
Location(s) from which employees shall be assigned for this project:	1410 Freeport Blvd. Sparks, NV 89431

3.1.2 A Nevada-based business may apply for a five percent (5%) preference on its proposal. This preference may apply if a business has its principal place of business within Nevada. This preference cannot be combined with any other preference, granted for the award of a contract using federal funds, or granted for the award of a contract procured on a multi-state basis. To claim this preference a business must submit a letter with its proposal showing that it qualifies for the preference.

3.1.3 **Please be advised**, pursuant to NRS 80.010, a corporation organized pursuant to the laws of another state shall register with the State of Nevada, Secretary of State's Office as a foreign corporation before a contract can be executed between the State of Nevada and the awarded vendor, unless specifically exempted by NRS 80.015.

3.1.4 The selected vendor, prior to doing business in the State of Nevada, shall be appropriately licensed by the State of Nevada, Secretary of State's Office pursuant to NRS76. Information regarding the Nevada Business License can be located at http://nvsos.gov.

Question	Response
Nevada Business License Number:	NV19781008753
Legal Entity Name:	Nelson Electric Company, Inc.

Is "Legal Entity Name" the same name as vendor is doing business as?

Yes	X	No	

If "No", provide explanation.

3.1.5 Has the vendor ever been engaged under contract by any State of Nevada agency?

Yes	X	No	

If "Yes", complete the following table for each State agency for whom the work was performed. Table can be duplicated for each contract being identified.

Question	Response
Name of State agency:	State of Nevada Public Works Board
State agency contact name:	
Dates when services were performed:	Multiple
Type of duties performed:	Electrical/Low Voltage Systems
Total dollar value of the contract:	Up to $10,000,000.00

3.1.6 Are you now or have you been within the last two (2) years an employee of the State of Nevada, or any of its agencies, departments, or divisions?

Yes		No	X

If "Yes", please explain when the employee is planning to render services, while on annual leave, compensatory time, or on their own time?

If you employ (a) any person who is a current employee of an agency of the State of Nevada, or (b) any person who has been an employee of an agency of the State of Nevada within the past two (2) years, and if such person shall be performing or producing the services which you shall be contracted to provide under this contract, you shall disclose the identity of each such person in your response to this RFP, and specify the services that each person shall be expected to perform.

3.1.7 Disclosure of any significant prior or ongoing contract failures, contract breaches, civil or criminal litigation in which the vendor has been alleged to be liable or held liable in a matter involving a contract with the State of Nevada or any other governmental entity. Any pending claim or litigation occurring within the past six (6) years which may adversely affect the vendor's ability to perform or fulfill its obligations if a contract is awarded as a result of this RFP shall also be disclosed.

Does any of the above apply to your company?

Yes		No	X

If "Yes", please provide the following information. Table can be duplicated for each issue being identified.

Question	Response
Date of alleged contract failure or breach:	N/A
Parties involved:	
Description of the contract failure, contract breach, or litigation, including the products or services involved:	
Amount in controversy:	
Resolution or current status of the	

Question	Response	
If the matter has resulted in a court case:	Court	Case Number
Status of the litigation:		

3.1.8 Vendors shall review and provide if awarded a contract the insurance requirements as specified in ***Attachment D, Insurance Schedule for RFP 3512.***

3.1.9 Company background/history and why vendor is qualified to provide the services described in this RFP. Limit response to no more than five (5) pages.

3.1.10 Provide a brief description of the length of time vendor has been providing services described in this RFP to the public and/or private sector.

3.1.11 Financial information and documentation to be included in accordance with ***Section 8.5, Part III – Confidential Financial Information***.

3.1.11.1 Dun and Bradstreet Number : 06-782-4847

3.1.11.2 Federal Tax Identification Number : 88-0151950

3.2 SUBCONTRACTOR INFORMATION

Subcontractors are defined as a third party, not directly employed by the contractor, who shall provide services identified in this RFP. This does not include third parties who provide support or incidental services to the contractor.

3.2.1 Does this proposal include the use of subcontractors?

Yes		No	

If "Yes", vendor shall:

3.2.1.1 Identify specific subcontractors and the specific requirements of this RFP for which each proposed subcontractor shall perform services.

3.2.1.2 If any tasks are to be completed by subcontractor(s), vendors shall:

A. Describe how the work of any subcontractor(s) shall be supervised, channels of communication shall be maintained and compliance with contract terms assured; and

B. Describe your previous experience with subcontractor(s).

3.2.1.3 Provide the same information for any proposed subcontractors as requested in ***Section 3.1, Vendor Information***.

NELSON ELECTRIC CO., INC.
COMMERCIAL - RESIDENTIAL - INDUSTRIAL

PH: 358-0643
FAX: 358-0674
NV LIC #010697

Submittal for Change of Equipment

Nelson Electric Co., Inc.
1410 Freeport Blvd., Sparks, NV 89431

Submitted DSP
In Place of BiAmp
Server I/O

Q-SYS Core 510i

Q-SYS Core 510i

Integrated Core Processor and I/O Expander

Features

- Q-SYS Core processing in a flexible chassis featuring 8 onboard I/O card slots
- Install any combination of Q-SYS I/O cards for maximum flexibility
- Audio, video and control processing on a dedicated Linux™ realtime OS
- Software configurable as either a Core 510i processor, or an I/O-510i expander
- Built using standard computer industry hardware and IT industry networking protocols
- Control and integrate external devices using TCP/IP, RS232 and GPIO
- Design with powerful and intuitive Q-SYS Designer Software application
- Seamlessly integrates with Q-SYS AV-to-USB bridging peripherals
- Provides simple integration with QSC amplifiers and loudspeakers
- Multiple levels of system redundancy

Introduction

The Q-SYS™ Core 510i processor is an audio, video and control processing system that leverages Intel™ CPUs and motherboards as well as a dedicated, Linux™ realtime operating system developed by QSC to provide class-leading capabilities for AV systems of any scale.

The Q-SYS Core 510i processor offers the most flexible audio I/O of any Core in the Q-SYS catalog, perfect for applications that require a diversity of analog, digital and networked audio connectivity. It features eight onboard I/O card slots that can be populated with any combination of Q-SYS Type-II I/O cards allowing diverse connectivity options. The Core 510i processor also offers two modes of operation whereby it can be deployed as a Q-SYS Core Processor with full processing capabilities, or configured as an I/O expander when configured via software as an I/O-510i.

Applications – Q-SYS Core mode

When deployed as a Q-SYS Core, the Core 510i processor provides an abundance of raw processing power for all audio, video and control requirements including integration with the new Q-SYS AV-to-USB Bridging solution. Onboard acoustic echo cancellation (AEC) processing coupled with high channel capacity networked audio provide the ability to manage multiple small to mid-sized conference spaces or a single large space.

Applications – I/O Frame mode

When configured via software as an I/O-510i, the device offers the ability to add up to 128 x 128 audio channels in to the Q-SYS system for processing on a separate Q-SYS Core. It can accommodate any combination of Q-SYS Type-II I/O cards. This is particularly useful when integrating large numbers of networked audio channels from Dante™, CobraNet™ or AVB™ devices and subsystems in to the Q-SYS Platform.

Network

The Q-SYS Platform utilizes IEEE networking standards and solutions for audio, control and video distribution over a standard Ethernet / IP network. Q-LAN provides deterministic system latencies with analog input to analog output guaranteed at 3.167ms. The Q-SYS Platform uses Q-LAN for audio, video and control connectivity with all Q-SYS peripherals. Additionally, the Q-SYS Core supports VoIP, SIP, LDAP, AES67, TCP/IP and HTTP Web Sockets among many other standard IT networking solutions.

Scalable Redundancy

While QSC is dedicated to building the most reliable products, some applications call for additional assurance. Any element on the Q-SYS Platform – Cores, networks, I/O-Frames and even amplifiers may be deployed in a redundant configuration. The system designer has the choice of making one or all system elements redundant.

Peripherals

The capabilities of the Q-SYS Platform are further enhanced by the ever growing suite of Q-SYS peripheral devices, all of which are compatible with all Q-SYS Core processors, including the Q-SYS Core 510i. The catalog of Q-SYS networked peripheral devices include amplifiers, touch screen controllers, paging stations, I/O channel expanders, PTZ-IP cameras for the conference room and AV-to-USB Bridging devices.

Q-SYS Core 510i Integrated Processor

Description	System processor and control engine with integrated I/O (or I/O expander when configured via software as I/O-510i)
Configuration Modes	"Q-SYS Core" - centralized processor and control engine for a Q-SYS system"I/O-510i configuration suited to integrating high channel-count networked I/O cards (Dante, CobraNet, AVB)" - peripheral to an additional Q-SYS Core processor on the system
Supported Peripherals (when configured as a Q-SYS Core Processor.)	I/O-8 Flex Channel Expander, I/O-USB Bridge, PTZ-IP Camera series, I/O Frame, I/O-Frame 8s, I/O-22, I/O-11 Series, Page Station Series, TSC Series touch screens
Software Requirements	Q-SYS Designer 6.x.x

Channel Capacity

Network Channel Capacity	256 x 256 (in Q-SYS Core mode) / 128 x 128 (in I/O Frame mode)
Local Audio I/O Capacity	8 audio I/O card slots - accommodates up to 128x128 total onboard I/O channels
AEC Channel Capacity	64 at 200ms tail length (available when configured as a Q-SYS Core Processor only)
Multitrack Player Capacity	16 tracks, expandable to 128 tracks (available when configured as a Q-SYS Core Processor only)
Media Drive Capacity	Approximately 6GB on the default drive (when configured as a Q-SYS Core Processor only, upgrade options are available)
Configure to Order Inputs/Outputs Options	
Audio I/O Cards	COL4: Line output card (4 channels) CODP4: DataPort card (4 channels) CIML4: Mic/line input card (4 channels) CIML4-HP: High Performance mic/Line input card (4 channels) CAES4: AES3 digital I/O card (4x4 channels) CIAES16: AES3 digital input card (16 channels) CCN32: CobraNet network bridge card (up to 32x32 channels) CAN32: AVB network bridge card (up to 32 channels) CDN64: Dante network bridge card (up to 64x64 channels)
Media Drives (in Q-SYS Core Mode)	M2-MD-S: 128GB M2-MD-M: 256GB M2-MD-L: 512GB
Multitrack Players (MTP): (in Q-SYS Core Mode)	MTP-32: 32 tracks MTP-64: 64 tracks MTP-128: 128 tracks

Controls and Indicators

Front Panel Controls	"NEXT" OLED page forward capacitive touch button "ID" device identification capacitive touch button "Clear Network Settings" - invoked when "NEXT" and "ID" are pressed simultaneously
Front Panel Connectors	AUX USB: USB Host x2 (Type A connectors)
Front Panel Indicators	Blue "POWER" LED 304x96 monochrome OLED display
Rear Panel Connectors	RS232: Male 9-pin D shell connector (DE-9) Video out: HDMI AUX USB: USB Host x4 (Type A connectors) AUX Network: RJ45 10/100/1000 Mbps GPIO: Female 15-pin D shell connector x2 (DA-15) Media Network LAN A: RJ45 1000 Mbps (QLAN, AES67, VoIP, WAN, Media Streaming, etc) Media Network LAN B: RJ45 1000 Mbps (QLAN, AES67, VoIP, WAN, Media Streaming, etc) AC Mains Power: IEC connector
Rear Panel Indicators	"Link", "Speed" and "Activity" LEDs on all LAN ports

please recycle

Q-SYS Core 510i Integrated Processor

Miscellaneous

Line Voltage	100 VAC - 240 VAC 50-60 Hz
Current Draw	3.7A Max @100 VAC (actual current draw depends on configuration options such as I/O cards and/or Media Drive, DSP loading and network loading)
Operating Temperature Range	0°C - 50°C
Storage Temperature	-20°C to +70°C
BTU/Hour	600 (power conversion estimate under typical load)
Humidty	5% to 85%
Regulatory	FCC 47 CFR Part 15 Class A, IC ICES-003, CE (EN55032, EN55035), EU RoHS directive 2011/65/EU, WEEE directive 2012/19/EU, China RoHS directive GB/T26572, EAC, RCM, UL, C-UL, EFUP 10, Expected Product Life Cycle 20 years
Product Dimensions	3.5" x 19" x 15" (89mm x 483mm x 381mm)
Shipping Carton Dimensions	23.5" x 20" x 6.5" (597mm x 508mm x 165mm)
Shipping Weight	23 lbs. minimum (installation of I/O cards increases shipping weight)
Included Accessories	6' UL/CSA/IEC line cord, safety instructions, regulatory statement, I/O connectors (included when purchasing I/O cards with Euro style terminal blocks)

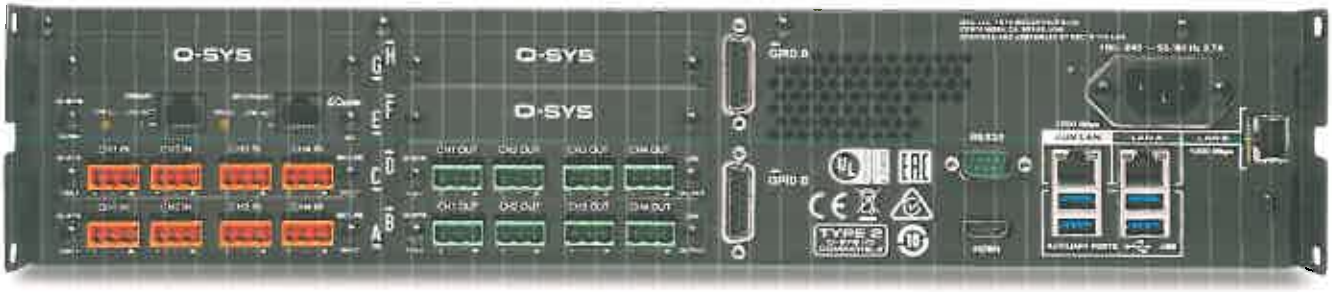

1675 MacArthur Boulevard • Costa Mesa, CA 92626 • Ph: +1.800.854.4079 or +1.714.957.7100 • Fax: +1.714.754.6174

©2017 QSC, LLC all rights reserved. QSC, Q-SYS and the QSC logo are registered trademarks in the U.S. Patent and Trademark Office and other countries. Intel is a trademark of Intel Corporation in the U.S. and other countries. CobraNet is a trademark of Cirrus Logic, Inc. All other trademarks are the property of their respective owners. Linux is the registered trademark of Linus Torvalds in the U.S. and other countries. Dante is a trademark of Audinate Pty. Ltd. All other trademarks are the property of their respective owners. Patents may apply or be pending.

please recycle

Q-SYS™

I/O Card Specifications

5 Cards Required
20 Total Inputs

2 Cards Required
8 Total Outputs

I/O Cards	Mic/Line Input Card CIML4	High-Performance Mic/Line Input Card CIML4-HP	Line Output Card COL4	DataPort Output Card CODP4
Description	Four channels of microphone/line-level analog audio input with 48V phantom power	Four channels of microphone / line-level analog audio input with 48V phantom power and high performance pre-amplifiers and A/D converters	Four channels of balanced, line-level analog output	Four audio output channels (2 DataPorts) for connection to DataPort equipped QSC amplifiers
Performance				
Dynamic Range Unweighted	> 105 dB	> 112 dB	> 112 dB	> 114 dB
Dynamic Range A-weighted	> 108 dB	> 115 dB	> 115 dB	> 117 dB
Distortion 20 Hz – 20 kHz +4 dBu (nominal input)	< 0.009% THD+N	< 0.004% THD+N	–	–
Distortion 20 Hz – 20 kHz 2 dB below clip (max)	< 0.08% THD+N	< 0.06% THD+N	< 0.004% THD+N	< 0.004% THD+N
Crosstalk 20 Hz – 20 kHz				
Inter-channel (max)	> 100 dB	> 110 dB	> 100 dB	> 95 dB
Inter-channel (typ)	> 110 dB	> 110 dB	> 110 dB	> 100 dB
Intra-channel (max)	> 100 dB	> 110 dB	> 100 dB	> 100 dB
Intra-channel (typ)	> 110 dB	> 110 dB	> 110 dB	> 110 dB
Frequency Response 20 Hz – 20 kHz (max)	± 0.5 dB	± 0.5 dB	± 0.5 dB	± 0.5 dB
Frequency Response 20 Hz – 20 kHz (typ)	± 0.2 dB	± 0.2 dB	± 0.2 dB	± 0.2 dB
Input Impedance				
Balanced (nominal)	10 k ohms	10 k ohms	–	–
Unbalanced (nominal)	10 k ohms	10 k ohms	–	–
Common Mode Rejection 20 Hz – 20 kHz (max)	> 45 dB	> 45 dB	–	–
Common Mode Rejection 20 Hz – 20 kHz (typ)	> 50 dB	> 50 dB	–	–
Max Input Level	0.123, 2.25, 8.70, 17.35 Vrms -16, 10, 21, 27 dBu -18.2, 7.04, 18.8, 24.78 dBv (4 selections)	1.23 to 17.35 Vrms -56 to 27 dBu -58.2 to 24.8 dBv (continuously variable)	–	–
Mute	Infinite attenuation (via digital mute)	Infinite attenuation (via digital mute)	Infinite attenuation (via electro-mechanical relays)	Infinite attenuation (via electro-mechanical relays)
Audio Converters				
Analog to Digital Conversion (ADCs)	24-bit delta-sigma at 48 or 96 kHz sample rate	24-bit delta-sigma at 48 or 96 kHz sample rate	–	–
Digital to Analog Conversion (DACs)	–	–	24-bit delta-sigma at 48 or 96 kHz sample rate	24-bit delta-sigma at 48 or 96 kHz sample rate
Group Delay	< 13 FS (≈ 271 µs) at 48 kHz	< 13 FS (≈ 271 µs) at 48 kHz	< 10 FS (≈ 196 µs) at 48 kHz	< 13 FS (≈ 271 µs) at 48 kHz
Connectors	Four 3-terminal Euro- style detachable terminal blocks	Four 3-terminal Euro-style detachable terminal blocks	Four 3-terminal Euro-style detachable terminal blocks	Two 15-pin HD15 connectors
User-configurable Options (software enabled)				
Phantom Power	+48 V phantom power (meets IEC 1938 [1996] spec)	+48 V phantom power (meets IEC 1938 [1996] spec)	–	–
Output Trim				
Vrms (max)	–	–	8.7 V	–
dBu (max)	–	–	21 dBu	–
dBv (max)	–	–	18.8 dBv	–
Amplifier Standby	–	–	–	Set or clear amplifier in standby mode
Mute	–	–	–	Set or clear individual channel mutes
Enable Meters	–	–	–	Enable data collection of meters for each channel
Audio Output Levels	–	–	–	Adjust individual audio channel levels
Amplifier Model Support	–	–	–	CX, PowerLight™ 3 Series, DCA, and legacy V1 models

Q-SYS™

I/O Card Specifications

I/O Cards	AES-3 Input/Output Card CAES4	CobraNet Bridge Card CCN32
Description	Four input and four output channels of AES-3 digital audio	Up to 32 input and 32 output channels of CobraNet digital audio
Frequency Response	± 0.2 dB	± 0.2 dB
Mute	Infinite attenuation (via digital mute)	Infinite attenuation (via digital mute)
Group Delay	37 Samples (0.760 ms actual) with Sample Rate Converter enabled	Selectable: 64 Samples (2.687 ms actual) 128 Samples (4.020 ms actual) 256 Samples (6.686 ms actual)
I/O Capacity	4x4	Selectable: 4x4 8x8 16x16 32x32 (in Core only)
Bundle Packing	—	0 to 8 channels
Network Transmitters	—	4
Network Recievers	—	4
Management	—	CobraNet management via SNMP
Connectors	Four 3-terminal Euro-style detachable terminal blocks	Dual RJ-45

Mic/Line Analog Input Card

High-Performance Mic/Line Analog Input Card

Analog Line Output Card

DataPort Output Card

AES-3 Digital Input/Output Card

CobraNet™ Digital Input/Output Card

QSC™

1675 MacArthur Boulevard • Costa Mesa, CA 92626 • Ph: 800/854-4079 or 714/957-7100 • Fax: 714/754-6174

please recycle

© 2012 QSC Audio Products, LLC. All rights reserved. QSC and the QSC logo are registered trademarks of QSC Audio Products, LLC in the U.S. Patent and Trademark office and other countries. Q-Sys is a trademark of QSC. Intel and the Intel logo are registered trademarks of the Intel corporation.

QSC™

Q-SYS™

Integrated System Platform

CDN64 Dante Bridge Card

Features

Features

- Up to 64x64 Dante network audio channels
- Sample rate conversion to and from other network audio transports such as CobraNet, AVB and Q-Lan
- Integrate Dante-enabled 'front-of-house' input or output sources with the 'back-of-house' or 'facility-wide' Q-Sys integrated platform

Q-Sys™ is a complete integrated system that encompasses everything from the audio input to the output of the loudspeakers; it provides all the routing, processing, control and monitoring, while maintaining the audio quality and reliability QSC has come to be known for.

The CDN64 Dante™ bridge card provides third-party Dante enabled digital audio products and Dante edge networks the ability to connect and interface with Q-Sys™.

Applications:

The CDN64 Dante Bridge Card is ideal for use in Performance venues such as theatres, auditoriums, convention centers and houses of worship, as well as a general solution to bridge Dante-enabled sources such as wireless microphones and digital mixers, directly into the Q-Sys eco-system for advanced processing and re-distribution over Q-Lan for larger LAN and WAN IT infrastructures.

Specifications

System Hardware	Q-Sys Dante Bridge Card
Description	Dante network audio input and output bridge card
Capacity and Sample Rate Support: *Sample rate conversion to Q-Sys system standard 48 kHz	64x64 channels at 44.1/48 kHz 32x32 channels at 88.2/96 kHz * 16x16 channels at 176.4/192 kHz *
Connectors	Dual RJ45

As part of QSC's ongoing commitment to product development, specifications are subject to change without notice.

QSC™

1675 MacArthur Boulevard • Costa Mesa, CA 92626 • Ph: 800/854-4079 or 714/957-7100 • Fax: 714/754-6174

please recycle

© 2014 QSC Audio Products, LLC. All rights reserved. QSC and the QSC logo are registered trademarks of QSC Audio Products, LLC in the U.S. Patent and Trademark office and other countries. Q-Sys is a trademark of QSC. Intel and the Intel logo are registered trademarks of the Intel corporation.

SAROS IC8LPT

Saros® Low-Profile 8" 2-Way In-Ceiling Speaker

- High-performance, low-profile 2-way in-ceiling speaker
- Requires only 5-1/8" (130 mm) mounting depth
- 8" polypropylene woofer with damped cloth surround for tight, controlled bass and clear midrange
- Optimized dual front ports for enhanced low-frequency response
- Wide-dispersion, horn-loaded titanium dome tweeter for crisp, clear high-end and enhanced pattern control
- Built-in 60 Watt 70/100V multi-tap transformer
- "Zero-bezel" frameless grille for a clean, contemporary appearance
- Integral metal back can with side-entry cable clamp
- Two-step swiveling dog mounting system for quick and easy installation
- Includes tile bridge for installation in a drop-tile ceiling
- Meets the requirements of UL® 2043 for installation in an environmental air-handling space
- 50 Watts program power handling at 8 Ohms
- 65 Hz - 20 kHz frequency response
- 95° nominal coverage pattern
- Available in black or white
- Paintable to blend with surroundings

Submitted Replacement for SoundTube SM800i

Saros® speakers by Crestron® deliver professional grade performance and flexible installation in a range of popular sizes for demanding commercial applications. Solid construction, easy installation, and high-end components are hallmarks of the Saros speaker line, ideal for use in background or foreground music, paging, and sound reinforcement systems. Saros speakers are engineered to achieve smooth, even coverage, high output, and clear, natural sound quality through the employment of horn-loaded titanium dome tweeters, high-efficiency damped cone woofers, ported enclosures, and precisely tuned crossovers.

The Saros IC8LPT model is a 2-way in-ceiling speaker featuring an 8 inch woofer and wide-dispersion, horn-loaded 1 inch dome tweeter. Its low-profile enclosure allows for installation in constricted ceiling spaces as shallow as 5-1/8 inches (130 mm). A built-in 60 Watt multi-tap transformer allows for use with 70 and 100 Volt distributed speaker systems. Power handling at 8 Ohms is 50 Watts (program), with a frequency response from 65 Hz to 20 kHz (±3 dB).

The Saros IC8LPT is smartly designed for quick and easy installation and years of reliable performance. Its "zero-bezel" frameless grille achieves an unobtrusive and contemporary appearance well-suited for use in restaurants and night clubs, retail spaces, houses of worship, convention facilities, universities, and office buildings. Installing the grille requires no hardware or tools, utilizing powerful magnets to hold it in place. A safety tether is included to prevent the grille from ever falling from the ceiling.

Unitized construction of the speaker enclosure simplifies specification and installation for use in new and existing ceilings. Mounting the speaker is facilitated using rugged, 2-step swiveling dogs integrated into the enclosure. The mounting dogs feature two positions to accommodate standard and extra thick surfaces up to 2.4 inches (61 mm). A tile bridge is included to provide proper support when installed in a typical drop-tile ceiling. The tile bridge is adjustable to enable off-center speaker positioning, and can be folded to fit through the speaker cutout in blind-mount situations. Two rigging points are also provided on the side of the speaker enclosure for securing to the building structure using the optional safety tether kit (SPKA-ST-15 [1]).

An integral metal back can is employed to meet the requirements of UL® 2043 for installation in an environmental air-handling (plenum) space. The wiring connection is accessible behind a rear cover panel by removing a single screw. Wiring enters through a side-mounted cable clamp attached to the cover panel. Connecting the wiring behind the cover panel is facilitated using a detachable screw terminal block with provisions for easy parallel wiring in a multi-speaker application. Setting the 70/100V transformer tap is performed via a screwdriver-adjustable control located on the front baffle behind the grille.

Saros IC8LPT speakers are available in white or black, and can be painted to blend with the ceiling surface. They are priced individually, but must be ordered in pairs.

SAROS IC8LPT Saros® Low-Profile 8" 2-Way In-Ceiling Speaker

SPECIFICATIONS

Features & Performance

Woofer: 8 inch (203 mm) polypropylene w/ring mode decoupled cloth surround & steel basket
Tweeter: 0.98 inch (25 mm) titanium dome, horn loaded
Crossover Frequency: 2.5 kHz
Impedance: 8 Ohms nominal with transformer set to "8Ω"
Transformer Taps: 3.75W/7.5W/15W/30W/60W at 70V;
7.5W/15W/30W/60W at 100V
Frequency Response: 65 Hz to 20 kHz (±3 dB)
Frequency Range: 55 Hz to 20 kHz (-10 dB)
Power Handling: 50 Watts program (8 Ohms)
Sensitivity: 90 dB @ 1W/1m
Coverage: 95° conical (nominal)

Connections

Input: (1) 4-pin 5 mm detachable terminal block with screw-down flanges; Speaker input with parallel pass-thru;
Maximum Wire Size: 12 AWG

Controls

Transformer Tap: (1) Recessed screwdriver-adjustable rotary switch on baffle;
Used to select 70/100V tap or 8 Ohms (bypass)

Environmental

Temperature: -2° to 120° F (-19° to 49° C)
Humidity: 5% to 95% RH (non-condensing)

Construction

Enclosure: Zinc-plated steel, plenum-rated, side-entry cable clamp
Baffle: ABS UL 94V-0 plastic
Grille: Steel with white or black textured finish, paintable, magnetically-held "zero-bezel" frameless design, safety tether included
Mounting: Flush ceiling mount using 4 integral 2-step swiveling dogs, 2.4 in (61 mm) maximum surface thickness, 5.2 in (130 mm) minimum mounting depth, 11.2 in (285 mm) diameter recommended cutout, tile bridge included, (2) rigging points for safety tether (SPKA-ST-15 sold separately)

Dimensions

Diameter: 12.13 in (308 mm) not including mounting dogs
Depth: 5.30 in (135 mm)

Weight

11.2 lb (5.0 kg)

Compliance

UL 1480, UL 1480A, UL 2043 [2]

MODELS & ACCESSORIES

Available Models

SAROS IC8LPT-B-T-EACH: Saros® Low-Profile 8" 2-Way In-Ceiling Speaker, Black Textured, Single (must be ordered in multiples of 2)
SAROS IC8LPT-W-T-EACH: Saros® Low-Profile 8" 2-Way In-Ceiling Speaker, White Textured, Single (must be ordered in multiples of 2)

Available Accessories

SPKA-ST-15: Safety Tether/Tie Down Kits
SPKA-NCTP-IC810: New-Construction Speaker Templates, Flat
SPKA-NCTP-IC811: New-Construction Speaker Templates, Collared
SPKA-GRILLE-IC810: Round Grilles (for replacement)
SAROS ICS8T: Saros® 8" In-Ceiling Subwoofer

Notes:

1. Item(s) sold separately.
2. UL 1480 speakers for fire alarm and signaling systems in the United States, in accordance with the National Electrical Code, NFPA 70, and the National Fire Alarm and Signaling Code, NFPA 72. In Canada, in accordance with CSA C22.1, Canadian Electrical Code, Part I, Safety Standard for Electrical Installations; and with CAN/ULC S524, Standard for Installation of Fire Alarm Systems. UL 2043 in accordance with the Standards for Fire Test for Heat and Visible Smoke Release for Discrete Products and Accessories Installed in Air-Handling Spaces, UL 2043 and ULC ORD-C2043.

Crestron warrants to the original end purchaser that this Crestron Speaker Product, when purchased directly from Crestron or an authorized Crestron Dealer, will be free from defects in material and workmanship for the life of the product except for speaker grills and outdoor rated speakers, which are warranted for five (5) years. Crestron will at its option and expense either repair the defect or replace the Speaker Product with a new or remanufactured Product or a reasonable equivalent. In cases where a new model is substituted, a modification to the mounting surface may be required. If mounting surface modification is required, Crestron assumes no responsibility or liability for such modifications.

This product may be purchased from an authorized Crestron dealer. To find a dealer, please contact the Crestron sales representative for your area. A list of sales representatives is available online at www.crestron.com/salesreps or by calling 800-237-2041.

The specific patents that cover Crestron products are listed online at: patents.crestron.com.

Certain Crestron products contain open source software. For specific information, please visit www.crestron.com/opensource.

Crestron, the Crestron logo, and Saros are either trademarks or registered trademarks of Crestron Electronics, Inc. in the United States and/or other countries. UL is either a trademark or registered trademark of UL LLC in the United States and/or other countries. Other trademarks, registered trademarks, and trade names may be used in this document to refer to either the entities claiming the marks and names or their products. Crestron disclaims any proprietary interest in the marks and names of others. Crestron is not responsible for errors in typography or photography. Specifications are subject to change without notice. ©2017 Crestron Electronics, Inc.
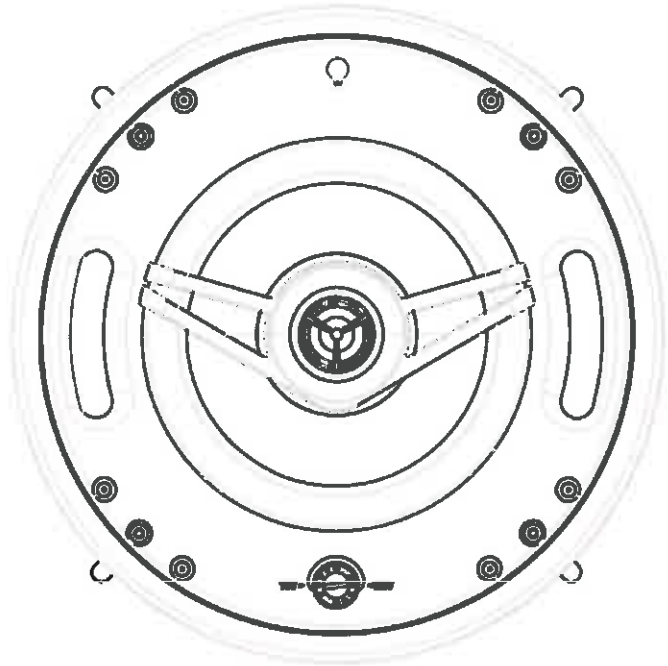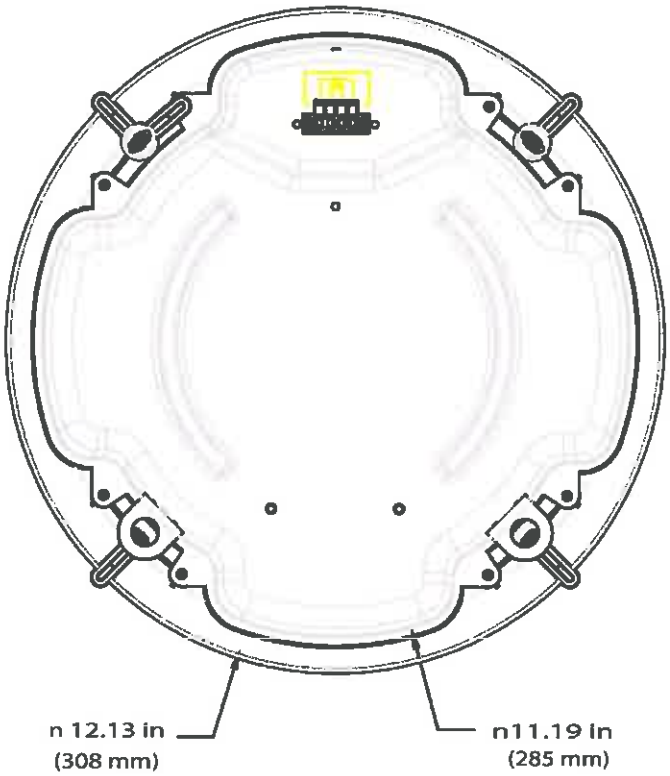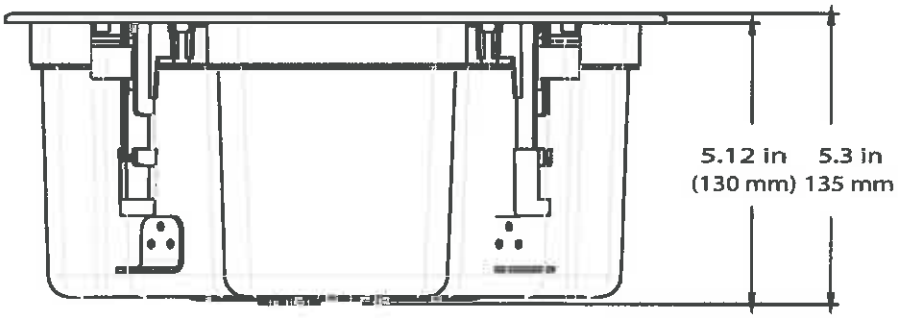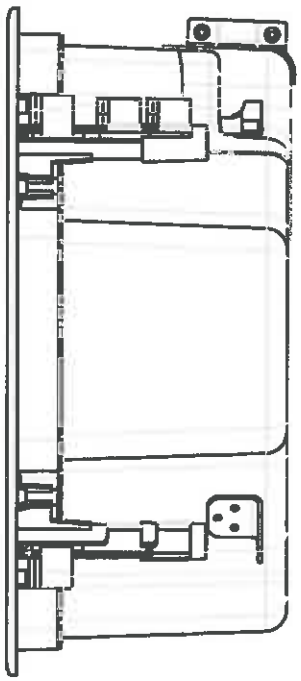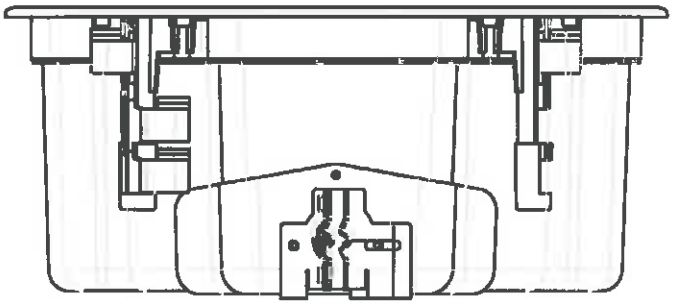
SAROS IC8LPT Saros® Low-Profile 8" 2-Way In-Ceiling Speaker