Schematic Rendering of the Proposed BWC System

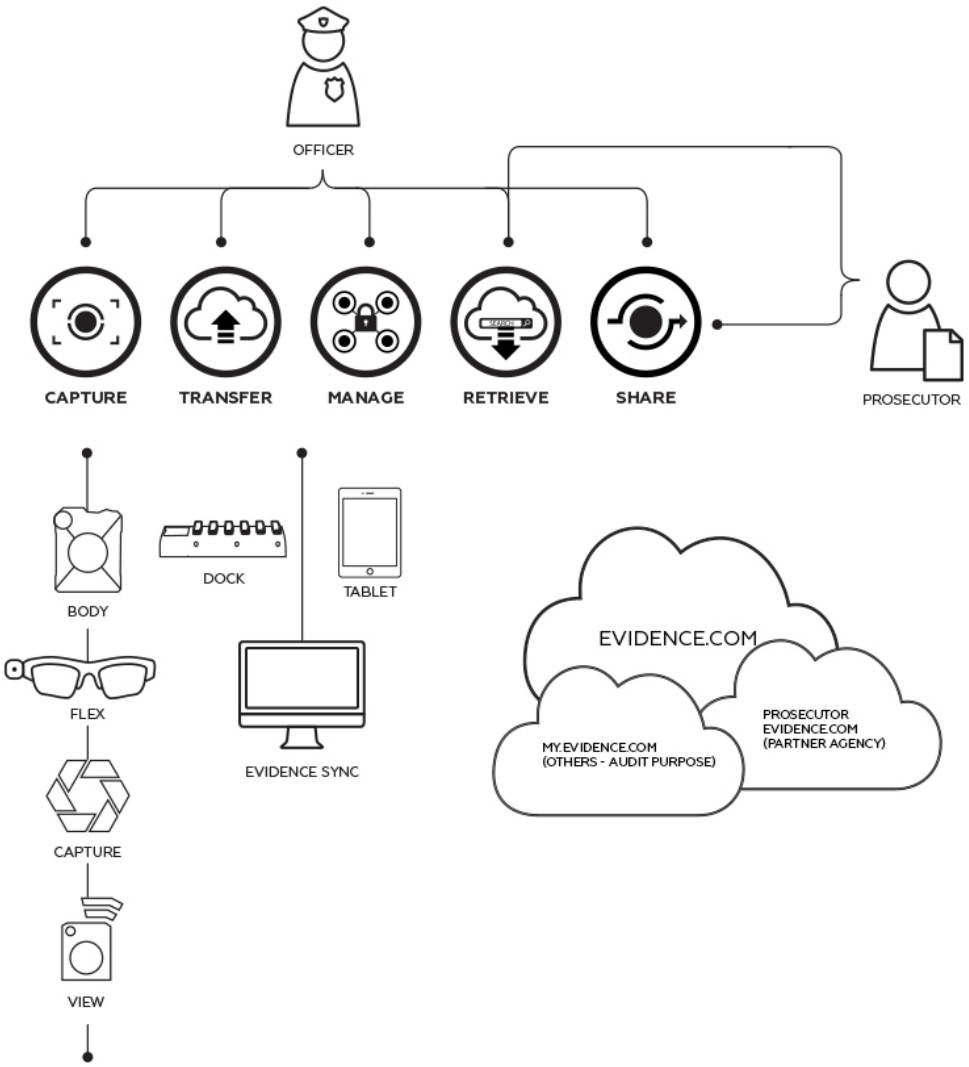

Evidence.com Solution Diagram

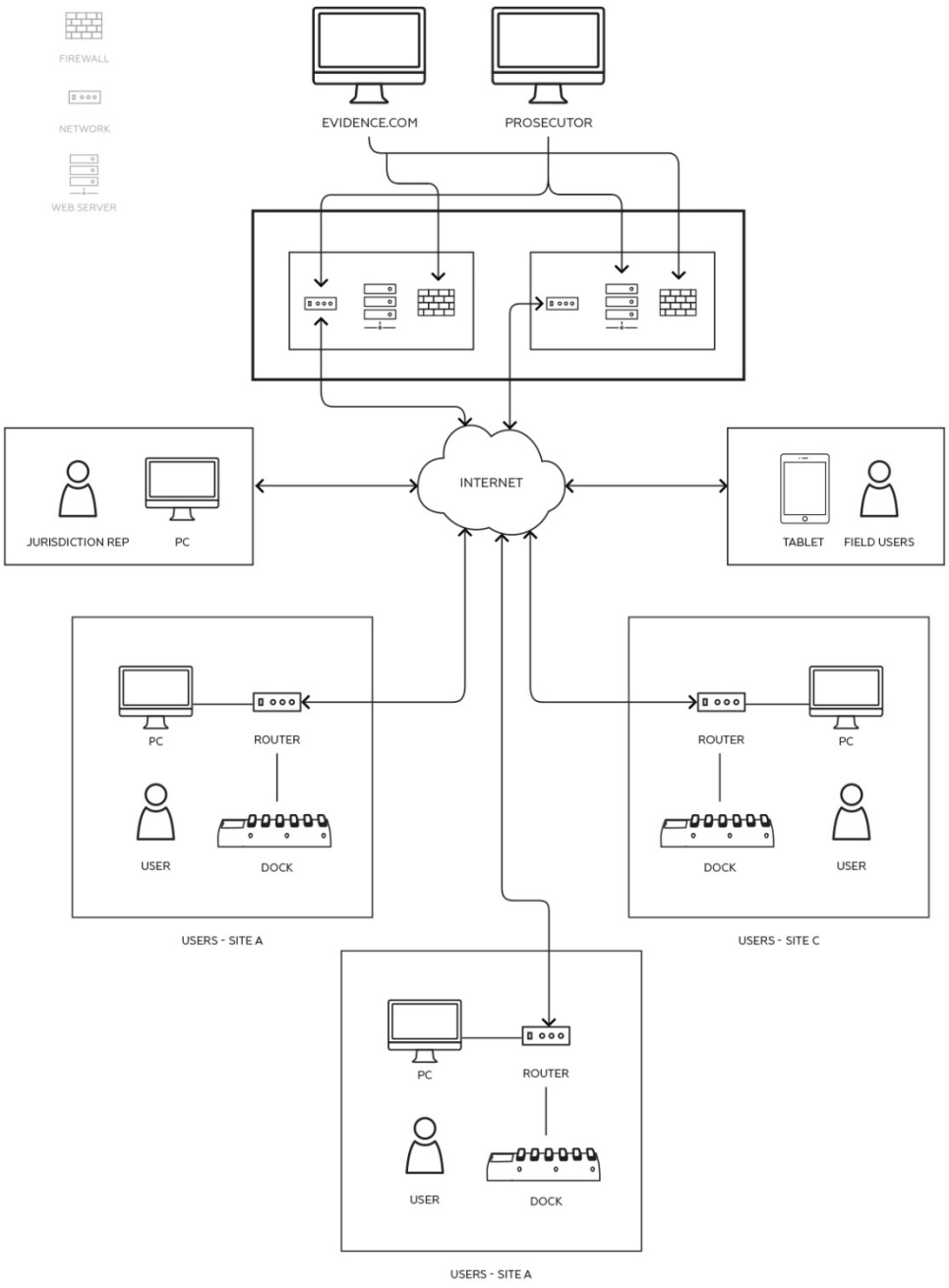

AXON Body 2

UNLIMITED HD.
NO DISTRACTIONS.

AXON BODY 2

A powerful platform
behind a simple camera

BEYOND A CAMERA AND BEYOND COMPARE

The #1 Video Platform | Unlimited HD | Constant Upgrades

Axon Body 2 takes the powerful simplicity of its predecessor to the next level. The single-unit design is now equipped with even greater capabilities like unlimited HD video, Wi-Fi video offload and industry-leading security enhancements. It's still part of the same growing platform that connects cloud, mobile and wearable technologies to give you a true end-to-end solution.

800-978-2737 axon.io/body2

AXON BODY 2 FEATURES AND BENEFITS

RETINA HD VIDEO: The industry's best low-light video now records in HD.

FULL-SHIFT BATTERY: 12+ hours

PRE-EVENT BUFFER: Capture up to 2 minutes before an event.

WIRELESS ACTIVATION: Axon Signal turns the camera on with lightbar and other sensor activation.

WI-FI VIDEO OFFLOAD: Axon Body 2 is capable of wireless offload to the cloud.

OPTIONAL MUTE: Ability to disable audio in the field to support dual party consent.

IN-FIELD TAGGING: Add a marker to important points in your video.

UNMATCHED DURABILITY: Built to withstand extreme weather and brutal conditions.

ADVANCED SECURITY: Evidence is encrypted at rest on the camera to protect data at all times.

RAPIDLOCK MOUNTS: Versatile mounts keep the camera steady during tough situations.

MOBILE APP: Stream, tag, and replay videos right on your phone with Axon View.

APP AVAILABLE FOR APPLE AND ANDROID

AXON BODY 2 SPECIFICATIONS

VIDEO RESOLUTION Configurable up to 1080p

WEATHER RESISTANCE IP67 (IEC 60529)

CORROSION RESISTANCE MIL-STD-810G METHOD 509.5 (SALT FOG)

FIELD OF VIEW 143 degrees

OPERATING TEMPERATURE -4 °F to 122 °F / -20 °C to 50 °C

DROP TEST 6 Feet

HUMIDITY 95% non-condensing

WARRANTY 1 year from date of receipt

RECORDING CAPACITY Up to 70 hours depending on resolution

Android is a trademark of Google, Inc., IOS is a trademark of Cisco Technology, Inc., and Apple, the Apple logo, iPhone, iPad and iPod touch are trademarks of Apple, Inc. The Android robot is reproduced or modified from work created and shared by Google and used according to terms described in the Creative Commons 3.0 Attribution License. Wi-Fi is a trademark of the Wi-Fi Alliance.

AXON, Axon, Axon View, TASER, and are trademarks of TASER International, Inc., some of which are registered in the US and other countries. For more information, visit www.taser.com/legal. All rights reserved. © 2016 TASER International, Inc.

MPC0227 REV A

Title: Axon Body 2 Camera Specifications
Department: Research and Development
Version: 4.0
Release Date: 8/19/2016

Axon Body 2 Camera Models

Model	Model No.	Color
Axon Body 2 camera	74001	Black

Specifications

1. Operating temperature range:
   −4 °F to 122 °F (−20 °C to 50 °C).
2. Storage temperature range:[1]
   −4 °F to 95 °F (−20 °C to 35 °C).
3. Charging temperature range:
   41 °F to 95 °F (5 °C to 35 °C).
4. Humidity: 95 percent non-condensing.
5. Drop test: 6-foot (1.8-meter).
6. IEC 60529 IP67 (6 dust, 7 water).
7. Salt fog MIL-STD-810G.
8. Up to 30 frames per second.
9. Settings:[2]

Resolution	File size for 1 h	Storage capacity
Low SD 480p (640 x 480 VGA resolution)	0.8 GB	>70 h
High SD 480p (640 x 480)	1.8 GB	~35 h
Low HD 720p (1280 x 720) (recommended)	2.7 GB	~23 h
High HD 1080p (1920 x 1080)	5.4 GB	~12 h

10. Specific absorption rate (SAR): 0.94 W/kg.
11. Rechargeable, replaceable lithium-ion polymer battery.
    3000 mAh capacity.[3,4]
12. Bluetooth 4.0.
13. USB 2.0.
14. Wi-Fi 802.11n at 5 GHz and 2.4 GHz.
15. More than 12 hours of battery life under normal operation.[5]
16. Video format: MPEG-4 (.MP4)
17. Video compression: H.264
18. Storage: 64 gigabyte solid-state non-removable embedded Multimedia Card (eMMC)
19. Encryption: 256-bit AES[2]
20. Light sensor: CMOS

Features

1. EVENT button to start and stop recording.
2. Pre-event buffer of 0–120 seconds, configurable by agency in 30-second increments.
3. On/Off slide switch to power the device.
4. Battery button and battery LED to indicate remaining battery capacity.
5. Operation LED on the top of the housing indicates camera status.
6. Dual-channel microphone: Stereo microphone (two-channel) always recording two tracks).
7. Haptic notification: Vibration feedback to accompany beep tones.
8. Near field communication (NFC) chip.
9. Several mounts are available.
10. Full color audiovisual camera.
11. 143° diagonal field of view camera lens. 107° horizontal field of view, and 78° vertical field of view.
12. Three-axis image stabilization.
13. Retina Low-Light capability less than 0.1 lux.
14. Playback and download via TASER software applications.
15. GPS tagging capability available through Android and iOS Axon View applications via Bluetooth technology. Streaming capability is available through Android and iOS Axon View applications via Wi-Fi technology.
16. Watermark: Date and time automatically embedded into the video.
17. Compatible with the Axon Signal Unit (ASU).

Physical Characteristics[6,7]

Dimensions				
Depth 1 (D1)	Depth 2 (D2)	Width (W)	Height (H)	Weight
0.94 in [2.4 cm]	1.01 in (2.6 cm)	2.76 in [7 cm]	3.42 in [8.7 cm]	5.0 oz [142 g]

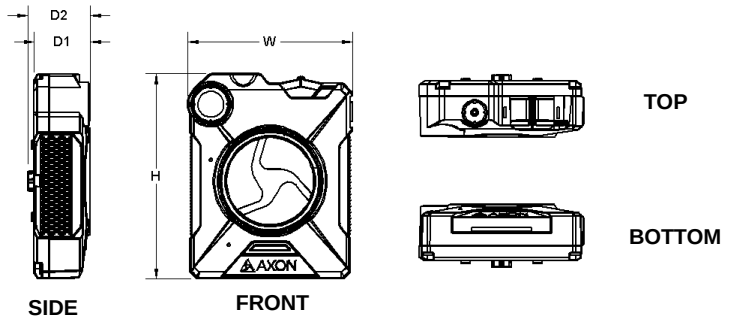

1 Less than 1 month at the high temperature. Long-term storage should be in a climate-controlled environment.
2 Resolution and encryption settings are agency-configurable.
3 Rechargeable lithium-ion polymer batteries have a limited life of approximately 1 year. With age, batteries will gradually lose their capacity to hold a charge. This loss of capacity (aging) is irreversible. As the battery loses capacity, the length of time it will power your device (run time) decreases. Additionally, lithium-ion polymer batteries continue to slowly discharge (self-discharge) when not in use or while in storage. It is advised that you routinely check the battery's charge status. The device should be recharged regularly to maintain the internal chemistry of the battery. TASER product user manuals summarize how to check battery status as well as battery charging instructions. The latest product manuals are available at www.taser.com.
4 The Axon Body 2 camera battery pack can be replaced. Please contact www.taser.com to purchase a replacement battery.
5 Temperature, other ambient conditions, and usage can affect battery life.
6 Product specification may change without notice; actual product may vary from picture.
7 Dimensions and weights are for reference only.

TASER International, Inc., reserves the right to change this specification without notice.
Android is a trademark of Google, Inc., Bluetooth is a trademark of the Bluetooth SIG, IOS is a trademark of Cisco, and Wi-Fi is a trademark of the Wi-Fi Alliance.
AXON, Axon, Axon Body, Axon Signal, Axon View, TASER, and are trademarks of TASER International, Inc., some of which are registered in the US and other countries. For more information, visit www.taser.com/legal. All rights reserved. © 2016 TASER International, Inc.