TASER Axon Fleet Camera System Quick Start Guide

English

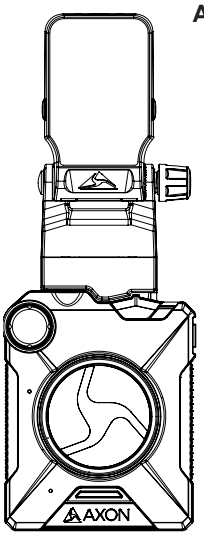

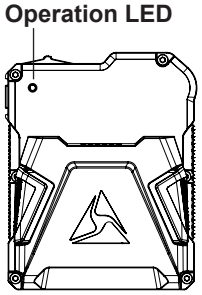

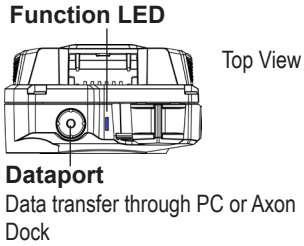

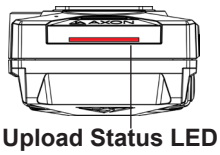

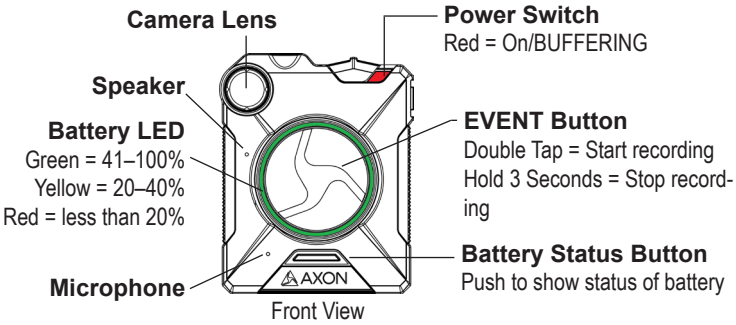

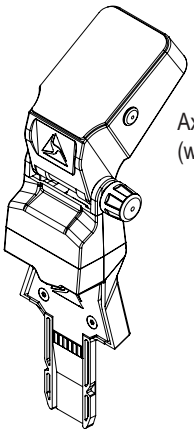

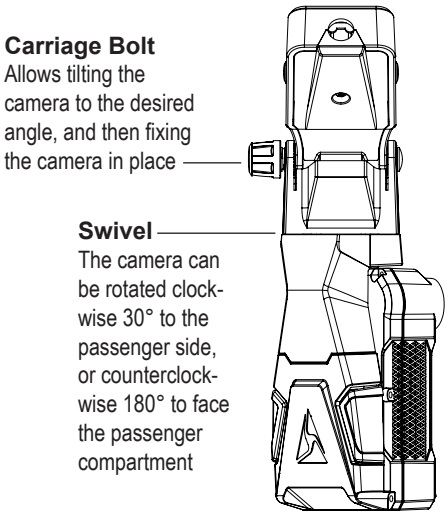

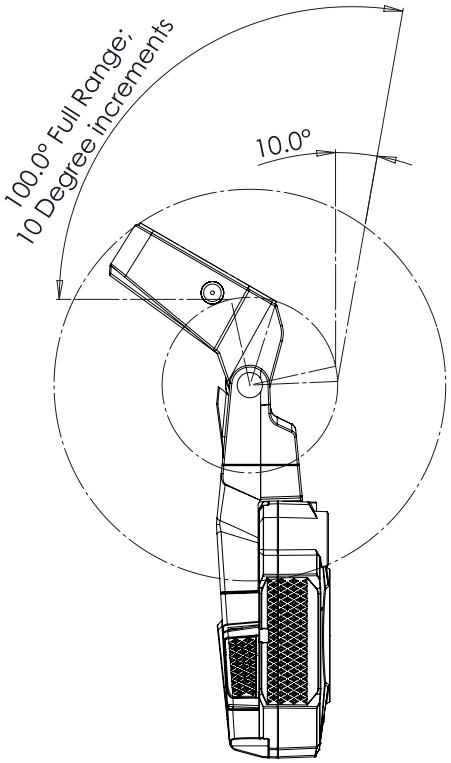

Axon Fleet power unit

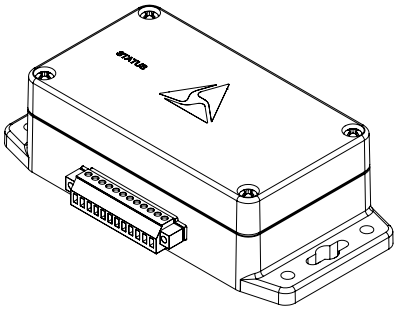

Read, understand, and follow all current instructions, warnings, and relevant TASER training materials before using any Axon system. The most up-to-date warnings and instructions are available at www.taser.com.

Recording

The Axon Fleet camera system has 2 operating modes. The default mode, or BUFFERING mode, provides pre-event buffering to capture activities that occur before you activate the EVENT (recording) mode.

1 Turn the system on. Move the ON/OFF switch to the ON position.

- The camera takes a few seconds to boot up and be ready to record (the red area under the switch will be exposed with the switch moved to the ON position).
- The operation LED will be solid red and then transition to blinking green when the system goes into BUFFERING mode.

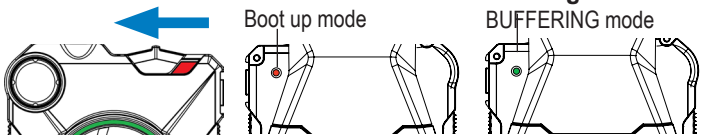

2 The Axon Fleet camera system will go into BUFFERING mode after the boot up sequence. The BUFFERING mode holds the previous 0–120 seconds (configurable by the agency) of video (NO AUDIO) leading up to the beginning of a recording. To record, quickly double-press the EVENT button. (You also can use the Axon View XL application to start recording.)

- The camera now records audio as well as video.
- The camera will beep twice to let you know that recording has started. The 2 beeps will repeat every 2 minutes (audio notifications can be deactivated if necessary). The operation LED will blink red.

3 To stop all recording and return to BUFFERING mode, press and hold the EVENT button for at least 3 seconds until there is a long, audible beep. (You also can use the Axon View XL application to stop recording.)

With default settings, the system does not capture audio in BUFFERING mode, so anything recorded in that mode will be video-only. BUFFERING mode starts only after the camera is turned on. The system does not record when the camera is turned off.

Camera Operation LED

The camera's operation LED displays the system's current operating mode.

Operating Mode	Operation LED
Recording	Blinking red
Buffering	Blinking green
Booting up/powering down	Solid red

Notification

The camera emits beeping sounds called audio prompts to notify you of the system status. These audio prompts usually occur after you perform an action with the camera.

Operating Mode	Audio
Powering on or off	One beep
Recording an event	Two beeps (every 2 minutes)
Press the battery button while the camera is recording	Two beeps
The device is ending an event and returning to BUFFERING mode	One long beep
The camera is running off the power unit (the car ignition is OFF) and the battery is at 20% capacity or lower	Four quick beeps (every 5 minutes)
Camera memory is full (camera will not record)	Three beeps

Uploading Data

Your agency may be set up to upload video automatically via wireless capability. If not, you can upload video with an Axon Dock. If you do not have an Axon dock, upload video with a Windows compatible computer using Evidence Sync software: taser.com/syncdownload.

1 Ensure the Axon Fleet system is off. Insert the camera into the Axon Dock. The dock automatically uploads data to Evidence.com services and deletes videos from the camera.

2 At the beginning of the next shift, ensure that your camera displays with a green upload status LED before removing it from the dock.

Axon Dock Upload Status LED

When you plug your camera into the Axon Dock, the upload status LED on the bottom of the camera displays the system's status.

System Status	LED Indication
In queue awaiting upload	Solid yellow
Initial connection (momentary)	Solid red (for 20 seconds or fewer)
Device ready (all videos uploaded successfully) and fully charged	Solid green
Device not assigned, agency mismatch, camera set in the offline mode, or device error	Blinking red
Uploading data	Blinking yellow – **DO NOT remove the camera from the Axon Dock**
Firmware update, internal battery charging, extremely low battery, or memory full	Blinking red and yellow – **DO NOT remove the camera from the Axon Dock**
Transfer error, device re-trying to transfer	Blinking green and yellow
Network error	Blinking red, yellow, and then green (cycling all colors)
Axon Dock has no communication with the camera	LED off

Windows is a trademark of Microsoft Corporation.

AXON, Axon, Axon Dock, Axon Fleet, Axon View XL, TASER, and are trademarks of TASER International, Inc., some of which are registered in the US and other countries. For more information, visit www.taser.com/legal. All rights reserved. © 2016 TASER International, Inc.

MPC0247 Rev: A

TASER Axon Fleet Camera System

User Manual

Models AX1001, AX1002, AX1003

IMPORTANT SAFETY INSTRUCTIONS

Read all warnings and instructions. Save these instructions.

The most up-to-date warnings and instructions are available at www.TASER.com

MMU0064 Rev: A

Contents

1 Chapter 1: Introduction
1 What Is the Axon Fleet Camera System?
1 Additional Reading
2 Chapter 2: Getting to Know Your Axon Fleet Camera System
5 Axon Fleet Mounts
7 Axon Fleet Power Unit
8 Chapter 3: Recording with the Axon Fleet System
8 Operating Modes
8 BUFFERING Mode (Turning on the Camera)
9 EVENT Mode (Starting Recording)
9 At the Beginning of Each Shift
10 Axon Signal
11 Chapter 4: Audio Prompts
12 Chapter 5: Uploading Video from the Axon Fleet System
12 Wireless via LTE
12 Wireless at Station
12 Axon Dock 2
12 USB Cable
13 Chapter 6: Troubleshooting
13 Customer Service
13 Warranty Policy
13 Warnings
13 Radio Waves
15 CE Declaration of Conformity

Chapter 1: Introduction

What Is the Axon Fleet Camera System?

The Axon Fleet solution is a camera system incorporating an audio and video recording device. This camera is designed for use in tough environmental conditions encountered in law enforcement, corrections, military, and security activities. The Axon Fleet system is designed to record events for secure storage, retrieval, and analysis via Evidence.com services. The recorded events can be transferred wirelessly to the Evidence.com website through Wi-Fi technology. You also can transfer information with the Axon Dock, or by using Evidence Sync software installed on a Windows computer.

The Axon Fleet system usually consists of 2 cameras: one installed in the front of the vehicle in a windshield mount, and the second pointed at the law enforcement vehicle's prisoner compartment.

The Axon Fleet system has 2 operating modes designed to accommodate the needs of law enforcement, corrections, security, and the military. The default mode, or BUFFERING mode, provides pre-event buffering to capture activities that occur prior to the user activating the EVENT mode.

If the Axon Fleet system is used in an emergency vehicle equipped with an Axon Signal Unit (ASU), the camera will transition from BUFFERING to EVENT mode when an appropriate event occurs (such as your emergency vehicle's light bar being activated).

The camera is normally powered by the vehicle. If the vehicle's ignition is shut off, an inline Axon Fleet power unit provides power for more than 4 hours of recording.

The Axon Fleet system uses some of the same technology as the Axon Body 2 camera. However, Axon Fleet cannot be used as an on-officer camera, and Axon Body 2 cannot be used as an in-car camera.

Additional Reading

This manual explains how to operate the Axon Fleet hardware. Other manuals cover additional aspects of the Axon Fleet system. These documents are available at www.taser.com.

The *Axon View XL Manual* provides instructions for using your mobile data terminal (MDT) with your Axon Fleet system.

Detailed instructions for using Axon cameras and other TASER products with Evidence Sync are available in the *Evidence Sync User Manual*.

If you have an Axon Dock, see the *Axon Dock Quick Start Guide* for how to transfer information to the Evidence.com website.

The Axon Academy website explains how to register for the Evidence.com website, configure settings, assign personnel to cameras, and transfer video from an Axon device to a computer. Visit academy.axon.io/.

Chapter 2: Getting to Know Your Axon Fleet Camera System

Although your Axon Fleet system can be configured for automated transfer from BUFFERING to EVENT mode under the right conditions, the camera still includes physical controls to enable video and audio recording. The camera also provides visual and audible notification of the Axon Fleet system's state of operation.

Note: Many of the features activated by the buttons below also can be activated with the Axon View XL program. See the *Axon View XL Manual* for more information.

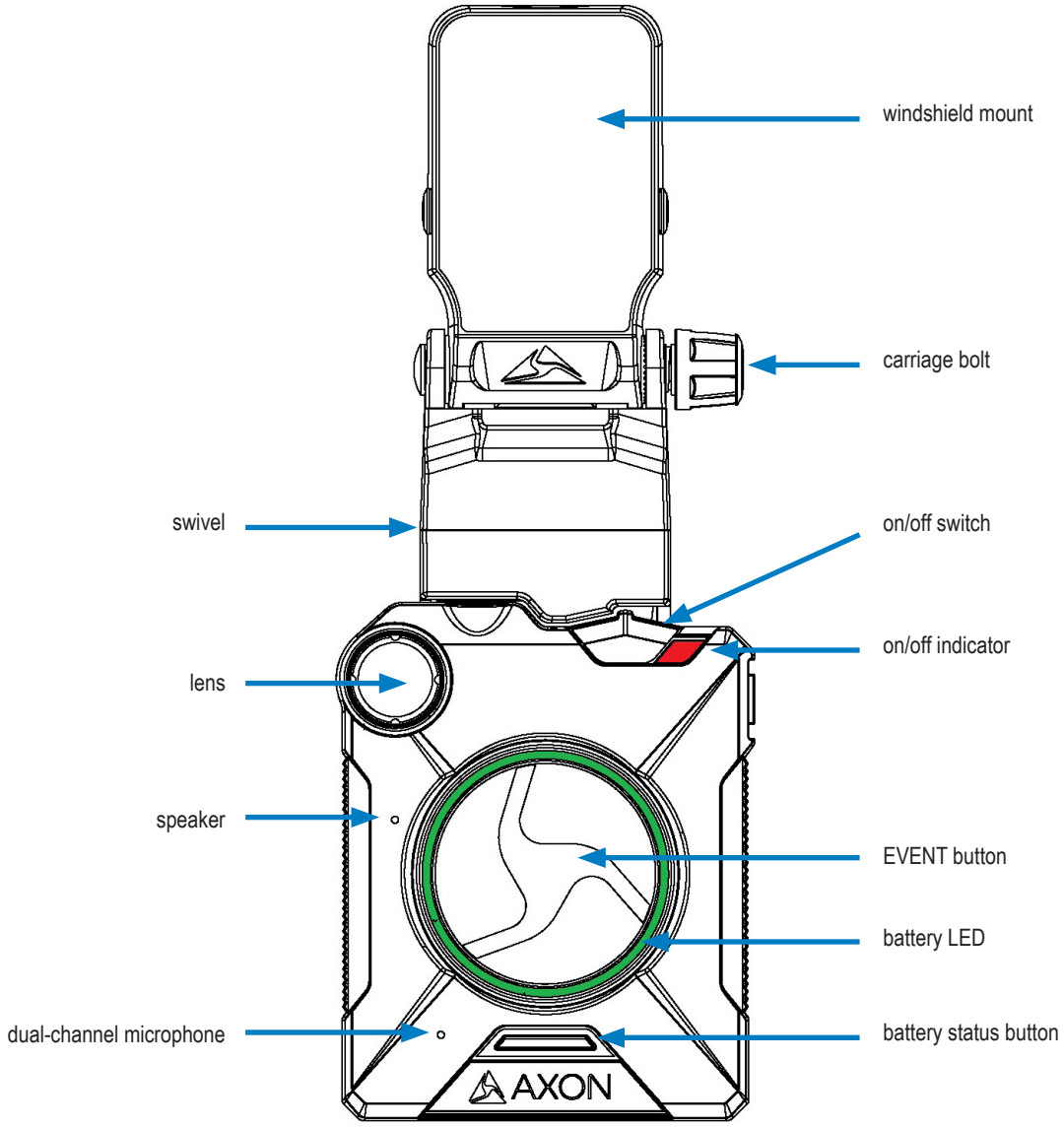

Windshield mount – Attaches to the vehicle's windshield with 3M VHB adhesive.

Carriage bolt – A knob used to fix the camera in place. After tilting the camera up or down and finding the correct angle, twist the knob to secure it.

Swivel – The camera can be rotated through a 210-degree range (180 degrees counterclockwise and 30 degrees clockwise), so it can capture footage to the sides of your vehicle. This feature also allows a camera mounted to the windshield to be pointed directly at the passenger compartment.

Back view of Axon Fleet system with the camera turned 30 degrees clockwise (toward the passenger side)

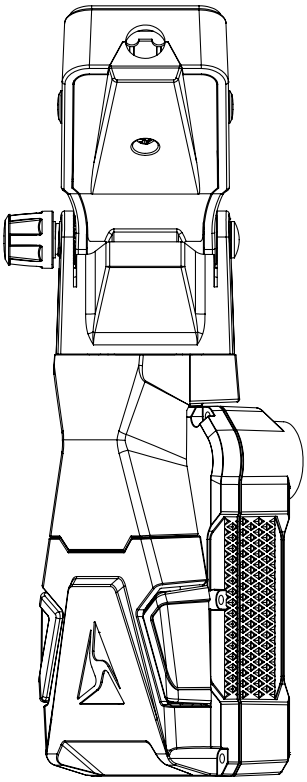

On/Off Switch – Turns the camera's power on or off.

On/Off Indicator – When the camera's power is turned on, the red portion is exposed. When the camera power is turned off, the red portion is covered from view.

Speaker – Provides audio notifications.

EVENT Button – Used to start and stop recording. (Double-press to start; hold for 3 seconds to stop recording.)

The camera might take several additional seconds to close out of the video when it is powered off before stopping an event.

Battery Status Button – When pressed, the Battery button lights up the Battery LED, which momentarily indicates the remaining battery capacity only (it does not indicate the operating mode).

Dual-Channel Microphone – For audio recording.

Lens – The camera lens.

Battery LED – When lit, momentarily indicates the remaining battery capacity in the Axon Fleet power

unit (it does not indicate the operating mode).

Battery Status	Battery LED
Battery capacity is 41–100 percent	Green
Battery capacity is 20–40 percent	Yellow
Battery capacity is less than 20 percent	Red during operation; flashing red and yellow during charging
Battery is critically low	Blinking red and yellow

Operation LED

Shows the camera's current operating mode (for Battery status, see the Battery LED, described above).

When you turn the camera on, the Operation LED turns solid red until the system is ready to use. Then the Operation LED blinks green (BUFFERING mode) and the Battery LED goes out.

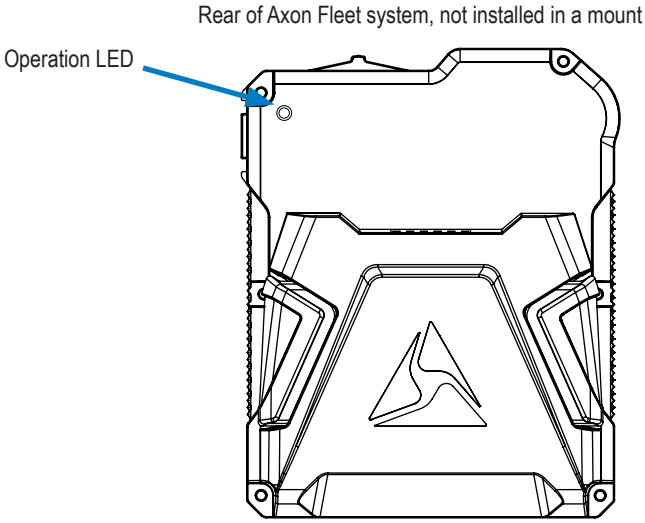

Operating Mode	Operation LED
Recording Recovering interrupted video*	Blinking red
Buffering	Blinking green
Booting up/powering down Error state**	Solid red

* When the Function LED also is blinking red.

** When the Function LED also is solid red.

Function LED

Note: When the camera is installed in the camera mount, the Function LED is not easily visible.

The Function LED shows when certain functions are enabled.

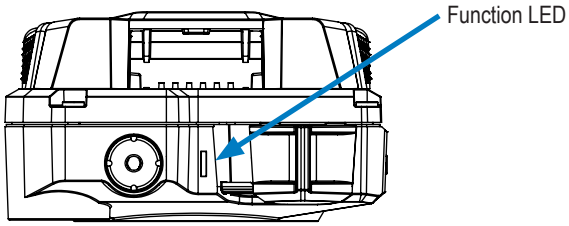

Function Enabled	Function LED
Mute	Blinking blue
Camera error*	Solid red
Bluetooth feature is booting up	Solid blue

* Use the power switch to turn the camera off and on.

Upload Status LED

Indicates when the camera is uploading data to the Evidence.com website wirelessly or via the Axon Dock.

System Status	Upload Status LED
Initial connection (momentary)	Solid red (for 20 seconds or less)
In queue awaiting upload	Solid yellow
Device ready (all videos uploaded successfully)	Solid green
Device not assigned, agency mismatch, camera set in the offline mode, or device error	Blinking red
Uploading data	Blinking yellow – **DO NOT remove the camera from the Axon Dock**
Firmware update, internal battery charging, extremely low battery, or memory full	Blinking red and yellow – **DO NOT remove the camera from the Axon Dock**
Transfer error, device re-trying to transfer	Blinking green and yellow
Network error (no connection)	Blinking red, yellow, and then green (cycling all colors)
Axon Dock has no communication with the camera, wireless upload not working. Contact TASER customer service.	LED off

Axon Fleet Mounts

The standard windshield mount is shown below. This mount can tilt the camera up or down in 10-degree increments. The full range of motion is 100 degrees.

After your camera is at the desired angle, tighten the carriage bolt to secure the camera in place.

Front view of Axon Fleet mount without camera; angled view of Axon Fleet mount without camera; side view of Axon Fleet mount and camera showing the range of motion.

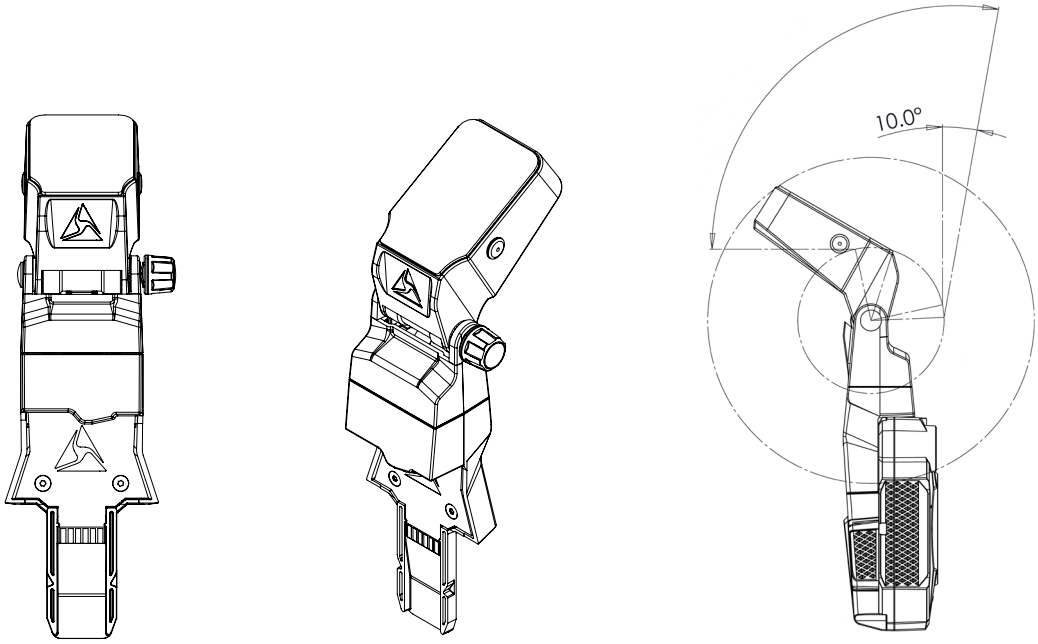

The camera is inserted directly up into the mount. There should be an audible click when the camera seats properly.

Rear, side, and front views of the camera and the mount.

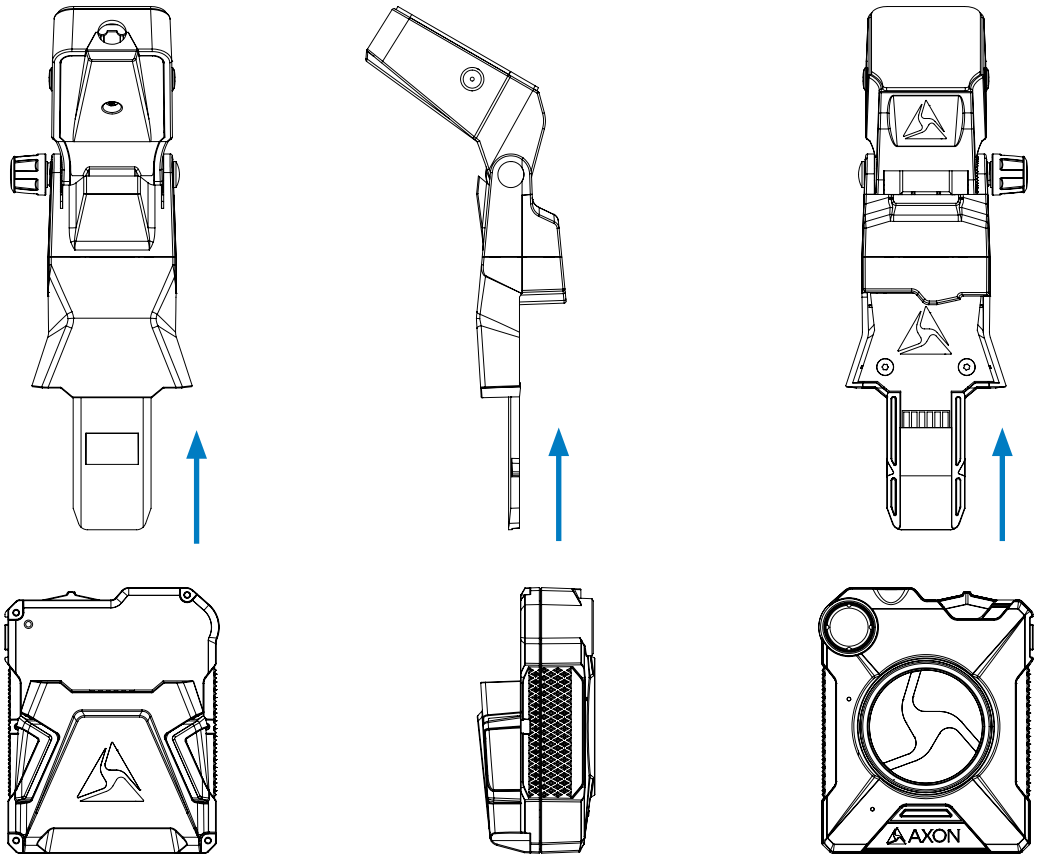

To remove the camera from the mount:

1. Press the 2 buttons on the back of the camera inward.
2. Pull the camera downwards.

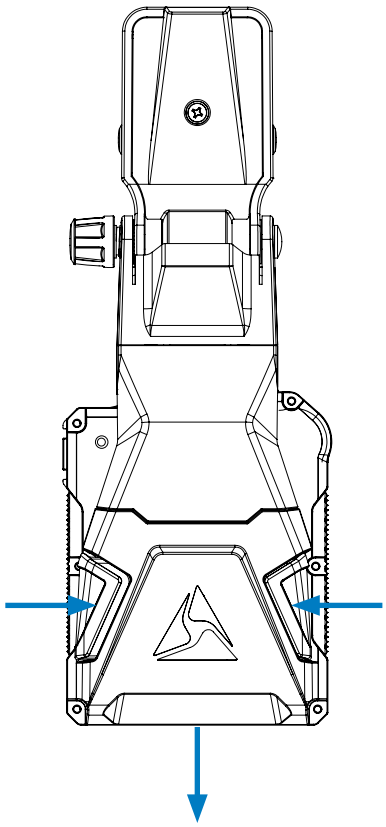

Axon Fleet Power Unit

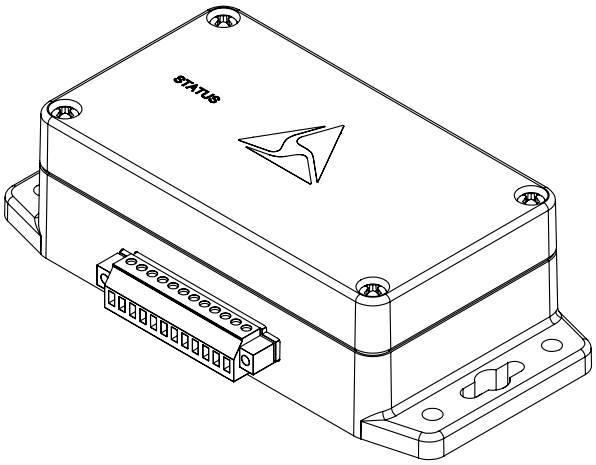

The Axon Fleet system uses the vehicle's electrical system as a power source. If the vehicle's ignition is shut off, the Axon Fleet power unit supplies power to the camera so it can keep recording. With a fully charged power unit, the camera can record over 4 hours without the engine running. The battery will begin recharging when the engine is turned back on. It may take over 3 hours for a depleted battery to fully recharge.

Chapter 3: Recording with the Axon Fleet System

Operating Modes

The Axon Fleet system has 2 operating modes:

1. BUFFERING (turning on the camera and starting pre-event buffering)
2. EVENT (event recording)

BUFFERING Mode (Turning on the Camera)

1. Move the ON/OFF switch on the camera to the ON position.

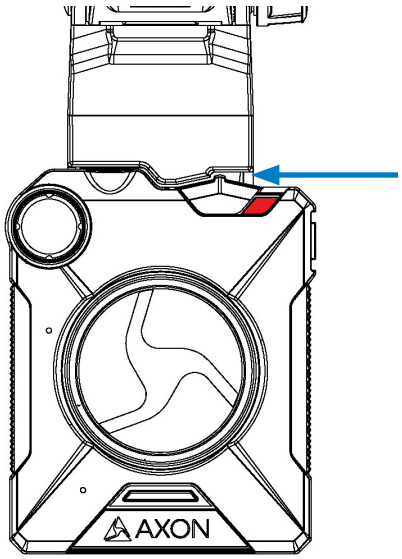

With the camera turned on, the Axon system is in the BUFFERING mode. When BUFFERING begins:

- The Operation LED on the back of the camera will blink green.
- The camera will be capturing video but no audio, and will not record to permanent memory while in BUFFERING mode.
- Buffered video duration is 30 seconds by default (00:00:30).

When you activate the EVENT mode, the buffered video (not audio) captured directly before the event, up to 30 seconds, will be saved and attached to the event in permanent memory. This feature is intended to capture the video of an incident just before your activation of EVENT

mode.

With default settings, the system does not capture audio in BUFFERING mode, so anything recorded in that mode will be video-only. BUFFERING mode starts only after the Axon Fleet system is turned on. The system does not record when the camera is turned off.

Notes:

- An agency can turn off the BUFFERING mode. If your agency has deactivated the BUFFERING mode, your Axon system will operate the same way as described in this manual, but the camera will not record anything until you double-press the EVENT button.
- An agency can extend the BUFFERING mode's duration to 2 minutes total (00:02:00).
- An agency can configure the BUFFERING mode so it records sound as well as video.

EVENT Mode (Starting Recording)

Do one of the following:

- Use the Axon View XL program to start recording.
- Quickly double-press the EVENT button on the camera.
- If your vehicle has an ASU, your camera will transition from BUFFERING to EVENT mode when the ASU activates it.

The system now records audio as well as video. The "buffered" video directly preceding the event will be saved and attached to the event recording. (Remember, with default settings, the buffered video will not contain audio.) The moment EVENT mode begins, both video and audio will be recorded from the camera and GPS coordinates (the GPS coordinates are provided by the MDT) will be recorded. This will continue throughout the duration of the recording until you stop the recording.

The camera provides you with indications that it is recording in EVENT mode:

- At the start of an event and every 2 minutes during an event, the system will beep twice.
- The Operation LED on the back of the camera will blink red.

2. To stop recording and return to BUFFERING mode,
   - Use the Axon View XL program to stop recording, or
   - Press and hold the EVENT button for 3 seconds.

   The system will beep once (with a long tone).
3. To turn off the system, move the on/off switch to the "off" position. When you end a recording with the on/off switch you will not go into BUFFERING mode; instead the system will turn off completely.

Note: An event not recorded by the camera cannot be played back or downloaded to your computer.

At the Beginning of Each Shift

Before starting your vehicle's ignition, turn the camera OFF and then turn it back ON.

Axon Signal

Axon Signal technology is included with the Axon Fleet system. However, your agency's administrator must activate the Axon Signal capability for it to work. When it is active, Axon Signal technology can take your Axon Fleet system from BUFFERING to EVENT mode.

Emergency vehicles can be equipped with an Axon Signal Unit (ASU). With light bar activation, or other activation triggers, the ASU sends a signal to your Axon Fleet system. Upon receiving this signal, your Axon camera transitions from BUFFERING to EVENT mode. When your camera starts recording, you will hear 2 beeps.

The ASU has a range of approximately 30 feet (9.1 meters). Another vehicle's light bar activation may cause your Axon camera to start recording if the light bar is equipped to do so.

The ASU (or any other device equipped with Axon Signal technology) can only send a signal to tell the camera to start recording. Axon Signal technology does not end recording. If a light bar is turned off, the camera will continue to record.

The ASU cannot turn an Axon system on. If the Axon Fleet system is turned off, the camera will not record even if an ASU sends an activation signal.

The ASU is purchased separately from the Axon Fleet system.

Chapter 4: Audio Prompts

The Axon Fleet system emits beeping sounds called “audio prompts” to notify you of the system status. These audio prompts usually occur after you perform an action with the camera.

These audio prompts can be accompanied by a haptic prompt (vibration) that matches the beeps, though this feature is disabled by default. See the *Axon View XL Manual* for information on activating and deactivating the haptic feature.

Operating Mode	Audio Notification	Haptic Notification (Vibration)
Powering on or off	One beep	Once
Recording an event	Two beeps (every 2 minutes)	Twice (every 2 minutes)
Press the Battery button while the camera is recording	Two beeps	None
The device is ending an event and returning to BUFFERING mode	One long beep	Once, long-duration
The battery is at 20 percent capacity or lower	Four quick beeps (every 5 minutes)	Four times quickly, then 5 times quickly
The camera memory is full	Three beeps. The camera will not start recording.	Three times

Chapter 5: Uploading Video from the Axon Fleet System

The Axon Fleet system can support the multiple offload options listed below:

Wireless via LTE

The Axon Fleet system can upload video via LTE, a fast wireless service, if the vehicle has an in-car router that supports LTE. For more information, see the *Axon View XL Manual*.

Wireless at Station

An agency can equip its parking facilities with wireless access points so that vehicles equipped with Axon Fleet systems can upload their videos. For more information, see the *Axon View XL Manual*.

Axon Dock 2

You can use an Axon Dock to upload information from your Axon Fleet system to the Evidence.com website. For more information, see the *Axon Dock Quick Start Guide*.

USB Cable

If Evidence Sync software is installed on your computer, you can download information from your camera to your computer or upload the information to the Evidence.com website. For more information see the *Evidence Sync User Manual*.

Chapter 6: Troubleshooting

If you experience difficulty with your Axon Fleet system, first power the device down, and start it again.

Customer Service

Visit www.taser.com and view the Support options, or call 1-800-978-2737.

Warranty Policy

TASER International warranty provisions are applicable on all Axon Fleet system products. See TASER International's website, www.taser.com, for detailed warranty information.

Warnings

For a full list of the warning associated with this product, see www.taser.com.

Radio Waves

Changes or modifications to the equipment not expressly approved by the manufacturer could void the product warranty and the user's authority to operate the equipment.

Your wireless device is a radio transmitter and receiver. It is designed and manufactured not to exceed the emission limits for exposure to radio frequency (RF) energy set by the Federal Communications Commission (FCC) of the U.S. Government. These limits are part of comprehensive guidelines and establish permitted levels of RF energy for the general population. The guidelines are based on standards that were developed by independent scientific organizations through periodic and thorough evaluation of scientific studies. The standards include a substantial safety margin designed to assure the safety of all persons, regardless of age and health. Before a device model is available for sale to the public, it must be tested and certified to the FCC that it does not exceed the limit established by the government-adopted requirement for safe exposure.

This equipment has been tested and found to comply with the limits for a Class B digital device, pursuant to part 15 of the FCC Rules. These limits are designed to provide reasonable protection against harmful interference in a residential installation. This equipment generates, uses and can radiate radio frequency energy and, if not installed and used in accordance with the instructions, may cause

harmful interference to radio communications. However, there is no guarantee that interference will not occur in a particular installation. If this equipment does cause harmful interference to radio or television reception, which can be determined by turning the equipment off and on, the user is encouraged to try to correct the interference by one or more of the following measures:

- Reorient or relocate the receiving antenna.
- Increase the separation between the equipment and receiver.
- Connect the equipment into an outlet on a circuit different from that to which the receiver is connected.
- Consult TASER International Customer Service for help.

FCC/IC NOTICE: This device meets the body worn human exposure limits found in OET Bulletin 65, 2001, and ANSI/ IEEE C95.1, 1992. Proper operation of this equipment according to the instructions found in this guide will result in exposure substantially below the FCC's recommended limits. To comply with the FCC and ANSI C95.1 RF exposure limits, this device has been tested for compliance with FCC RF Exposure limits in the typical configuration. The radiated output power of this wireless device is far below the FCC radio frequency exposure limits.

This device complies with part 15 of the FCC Rules. Operation is subject to the following two conditions: (1) This device may not cause harmful interference, and (2) this device must accept any interference received, including interference that may cause undesired operation.

RSS 210 Warning Statement: The installer of this equipment must ensure that the antenna is located or pointed such that it does not emit RF field in excess of Health Canada limits for the general population; consult Safety Code 6, obtainable from Heath Canada's Web site www.hc-sc.gc.ca/rpb.

This device complies with Industry Canada licence-exempt RSS standard(s). Operation is subject to the following two conditions: (1) this device may not cause interference, and (2) this device must accept any interference, including interference that may cause undesired operation of the device.

Le présent appareil est conforme aux CNR d'Industrie Canada applicables aux appareils radio exempts de licence. L'exploitation est autorisée aux deux conditions suivantes: (1) l'appareil ne doit pas produire de brouillage, et (2) l'utilisateur de l'appareil doit accepter tout brouillage radioélectrique subi, même si le brouillage est susceptible d'en compromettre le fonctionnement.

THIS MODEL DEVICE MEETS THE GOVERNMENT'S REQUIREMENTS FOR EXPOSURE TO RADIO WAVES.

Section 8.4 of RSS-GEN

This Device complies with Industry Canada License-exempt RSS standard(s). Operation is subject to the following two conditions: 1) this device may not cause interference, and 2) this device must accept any interference, including interference that may cause undesired operation of the device.

Cet appareil est conforme aux normes d'exemption de licence RSS d'Industrie Canada. Son utilisation est soumise aux conditions suivantes : 1) cet appareil ne doit pas causer de brouillage, et 2) doit accepter tout brouillage, y compris le brouillage pouvant entraîner un fonctionnement indésirable.

Section 8.3 of RSS-GEN

Under Industry Canada regulations, this radio transmitter may only operate using an antenna of a type and maximum (or lesser) gain approved for the transmitter by Industry Canada. To reduce potential radio interference to other users, the antenna type and its gain should be so chosen that the equivalent isotropically radiated power (e.i.r.p.) is not more than that necessary for successful communication.

Conformément à la réglementation d'Industrie Canada, le présent émetteur radio ne peut fonctionner qu'au moyen d'une antenne d'un seul type et d'un gain maximal (ou inférieur) approuvé pour

l'émetteur par Industrie Canada. Dans le but de réduire les risques de brouillage radioélectrique pour les autres utilisateurs, il faut choisir le type d'antenne et son gain de sorte que la puissance isotrope rayonnée équivalente (p.i.r.e.) ne dépasse pas celle requise pour établir une communication satisfaisante.

THIS MODEL DEVICE MEETS THE GOVERNMENT'S REQUIREMENTS FOR EXPOSURE TO RADIO WAVES.

CE Declaration of Conformity

TASER International declares that this Axon system is in compliance with the requirements and other relevant provisions of the RTT&E Directive 1999/5/EC regarding radio and telecommunications equipment and the Directive 2014/30/EU regarding electromagnetic compatibility. A copy of the original Declaration of Conformity can be found at www.taser.com.

3M and VHB are trademarks of 3M, Bluetooth is a trademark of the Bluetooth SIG, Wi-Fi is a trademark of the Wi-Fi Alliance, and Windows is a trademark of the Microsoft Corporation.

, AXON, Axon, Axon Body 2, Axon Dock, Axon Fleet, Axon Signal, Evidence.com, Evidence Sync, and are trademarks of TASER International, Inc., some of which are registered in the US and other countries. For more information visit www.taser.com/legal. All rights reserved. © 2016 TASER International, Inc.

MMU0064 Rev: A