AXON Flex

EVIDENCE FROM YOUR POINT OF VIEW

AXON FLEX

Adaptive, point-of-view camera

FLEXIBILITY AND DURABILITY UNITE

The #1 On-Officer Video Platform | Flexible Mounting Options | 75° Field of View

Axon Flex is a compact, point-of-view video system with flexible mounting options. Officers can mount the durable camera on their eyewear, epaulette, collar, helmet, ball cap, and more. A 30-second buffer ensures that events are recorded in their entirety, and retina lowlight technology automatically adjusts for changes in lighting similar to the human eye.

800-978-2737 axon.io/flex

AXON FLEX FEATURES AND BENEFITS

MULTIPLE MOUNTING OPTIONS: Affix to eyewear, shirt collars, helmets, ball caps, and more.

OFFICER PERSPECTIVE: Retains indisputable testimony of your point of view.

30-SECOND PRE-EVENT BUFFER: Capture the build-up, not just the action.

DURABLE DESIGN: Built to withstand extreme weather and brutal conditions.

RETINA LOW-LIGHT: Adjusts to changes in lighting similar to the human eye.

DOCK AND WALK: Digital data uploads automatically while recharging.

MOBILE APP: Stream, tag, and replay videos right on your phone with Axon View.

AXON SIGNAL: Automatic activation from Smart Weapon, light bar, and other in-car triggers.

APP AVAILABLE FOR APPLE AND ANDROID

AXON FLEX SPECIFICATIONS

WEATHER RESISTANCE IEC 60529 IPx2 (dripping rain); MIL-STD-810G Method 510.5 Procedure 1 (blowing dust)

HOUSING High-impact polymer

FIELD OF VIEW 75 degrees

OPERATING TEMPERATURE -4 °F to 122 °F [-20 °C to 50 °C]

DROP TEST 6 feet

HUMIDITY 80% non-condensing

WARRANTY 1 year from date of receipt

RECORD TIME 4 to 13 hours depending on resolution

Apple and are trademarks of Apple Inc., and Android are trademarks of Google Inc.

, AXON, Axon View and Axon Signal are trademarks of TASER International, Inc., and Axon, Axon Flex, TASER, and are trademarks of TASER International, Inc., registered in the US and other countries. For more information, visit www.taser.com/legal. All rights reserved. © 2016 TASER International, Inc.

MPC0217 REV C

Title: AXON flex™ Camera Specifications
Department: Research and Development
Version: 6.0
Release Date: 9/17/2014

AXON flex Camera Models

Model	Model No.	Color
AXON flex Camera[1]	73000 series	Black

Specifications

1. Operating temperature range:
   −4 °F to 122 °F [−20 °C to 50 °C]
2. Storage temperature range:[2]
   −4 °F to 95 °F [−20 °C to 35 °C]
3. 75° field of view camera lens
4. Humidity: 80 percent non-condensing, when cable is attached
5. 30-second pre-event video buffer. Buffer does not include audio.
   Note: Buffer time can change depending on device state.
6. Up to 30 frames per second.
7. 640 x 480 VGA video resolution.
8. Up to 8 GB non-removable, solid state storage.[3]
9. Approximately 4 hours video storage under highest quality recording settings; up to 9 hours storage under medium quality recording settings; and up to 13 hours storage available at lowest quality recording setting.
10. Specific absorption rate (SAR): 0 W/kg.
11. Rechargeable lithium-ion polymer battery.[4]

Features

1. Ambidextrous design for left- or right-side mounting.
2. Multiple attachment options available, including: Oakley Flak Jacket eyewear mount; Low Rider headband; Collar mount; Epaulette/shoulder mount; and Helmet mount.
3. Playback via the AXON® Mobile smart phone application or EVIDENCE Sync software.
4. Several cable styles and cable lengths are available.[5]
5. Configurable bit rate (multiple settings to optimize file size and upload speed).
6. Full color audiovisual camera.
7. Retina Low-Light capability less than 1 lux.
8. Constructed from impact resistant polymer.
9. Data can be viewed and downloaded with EVIDENCE.com services through the AXON flex Evidence Transfer Manager (ETM) or EVIDENCE.com Dock[6] and EVIDENCE Sync software.
10. Data download to personal computer through EVIDENCE Sync software is also available.
11. GPS tagging and streaming capability available through Android and iPhone AXON Mobile applications.

Physical Characteristics[7,8]

Dimensions			
Length (L)	Height (H)	Width (W)	Weight
3.2 in [8.1 cm]	0.8 in [2.0 cm]	0.7 in [1.8 cm]	0.53 oz (15 g)

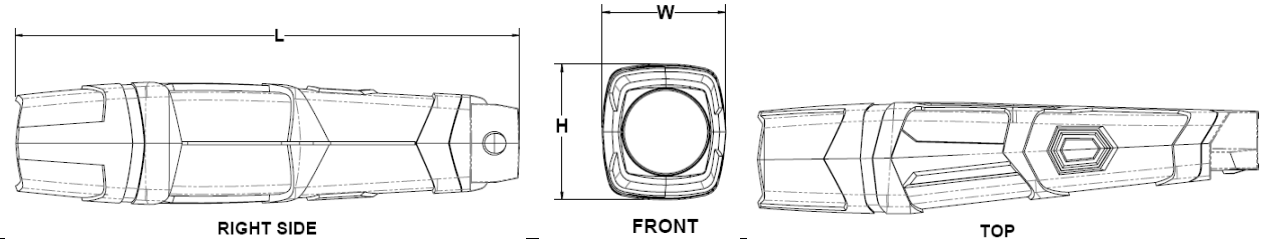

1 Requires a cable connection to the AXON flex Controller (model number 73001) to function.

2 Less than 1 month at the high temperature. Long-term storage should be in a climate-controlled environment.

3 Multi-Level Cell flash memory is rated for approximately 10,000 write cycles. The current technology along with normal usage, which includes recording and buffering and ETM sync processes, typically gives memory components a useful life of 4 to 5 years. A portion of the memory is reserved for the operating system.

4 The AXON flex camera contains a non-replaceable lithium-ion polymer battery. Rechargeable lithium-ion polymer batteries have a limited life of approximately 2 years, and will gradually lose their capacity to hold a charge. This loss of capacity (aging) is irreversible. As the battery loses capacity, the length of time it will power your device (run time) decreases. Additionally, lithium-ion polymer batteries continue to slowly discharge (self-discharge) when not in use or while in storage. It is advised that you routinely check the battery's charge status. The device should be recharged regularly to maintain the internal chemistry of the battery. TASER product user manuals summarize how to check battery status as well as battery charging instructions. The latest product manuals are available at www.TASER.com

5 While all TASER products are thoroughly tested to ensure product reliability, all usage conditions cannot be anticipated. User checks are recommended to ensure connections remain snug and performance is unaffected. AXON flex cables should be replaced at the first sign of wear or breakdown to ensure reliable function and use.

6 User account and subscription required.

7 Product specification may change without notice; actual product may vary from picture.

8 Dimensions and weights are for reference only.

TASER International reserves the right to change this specification without notice.
Android is a trademark of Google, Inc. iPhone is a trademark of Apple, Inc. Flak Jacket is a trademark of Oakley, Inc.
AXON flex is a trademark of TASER International, Inc., and AXON, TASER, and © are registered trademarks of TASER International, Inc. registered in the U.S. All rights reserved. © 2014 TASER International, Inc.

Title: Axon Flex® Controller with Axon Signal™ Capability Specifications
Department: Research and Development
Version: 1.0
Release Date: 6/10/2015

Axon Flex Controller Signal Equipped Model		
Model	**Model No.**	**Color**
Axon Flex Controller Signal Equipped[1]	70115	Black

Specifications

1. Operating temperature range:
   −4 °F to 122 °F [−20 °C to 50 °C]
2. Storage temperature range:[2]
   −4 °F to 95 °F [−20 °C to 35 °C]
3. Charging temperature range:
   41 °F to 95 °F [5 °C to 35 °C]
4. Humidity: 80 percent non-condensing, with cable attached.
5. Rechargeable lithium-ion polymer battery.
   2500 mAH capacity.[3,4]
6. More than 12 hours of battery life under normal operation.[5]
7. Bluetooth Signal Range: Minimum 30 feet (9.14 m)

Features

1. EVENT button to start recording and return to buffering.
2. On/Off slide switch to power the device.[6]
3. Battery button and battery LED to indicate remaining battery capacity.
4. Operation LED on the top of the housing indicates camera status.
5. Several cable styles and cable lengths are available.[7]
6. Holster and several clip mounts are available.
7. Compatible with the Axon Signal Unit (ASU).

Physical Characteristics[8,9]

Dimensions			
Depth (D)	Width (W)	Height (H)	Weight
0.8 in [2.0 cm]	2.6 in [6.6 cm]	3.3 in [8.4 cm]	3.3 oz. [94 g]

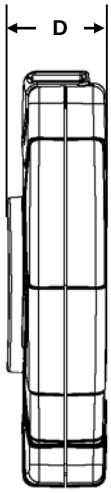

RIGHT SIDE

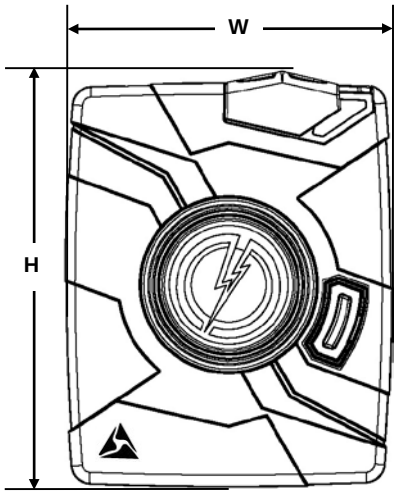

FRONT

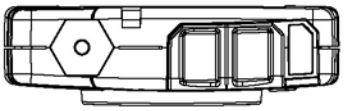

TOP

[1] Requires cable connection to an Axon Flex Camera (model number 73000) for audio/video recording.

[2] Less than 1 month at the high temperature. Long-term storage should be in a climate-controlled environment.

[3] Rechargeable lithium-ion polymer batteries have a limited life of approximately 2 years or approximately 300 full charge and discharge cycles. With age, batteries will gradually lose their capacity to hold a charge. This loss of capacity (aging) is irreversible. As the battery loses capacity, the length of time it will power your device (run time) decreases. Additionally, lithium-ion polymer batteries continue to slowly discharge (self-discharge) when not in use or while in storage. It is advised that you routinely check the battery's charge status. The device should be recharged regularly to maintain the internal chemistry of the battery. TASER product user manuals summarize how to check battery status as well as battery charging instructions. The latest product manuals are available at www.TASER.com.

[4] The Axon Flex Controller cannot be disassembled. The internal battery is only replaceable as a complete assembly. Please contact www.TASER.com to purchase a replacement Axon Flex Controller.

[5] Temperature, other ambient conditions, and usage can affect battery life.

[6] The On/Off switch is magnetically activated. Close proximity to other magnets or magnetic fields may cause the device to turn off or on.

[7] While all TASER products are thoroughly tested to ensure product reliability, all usage conditions cannot be anticipated. User checks are recommended to ensure connections remain snug and performance is unaffected. Axon Flex cables should be replaced at the first sign of wear or breakdown to ensure reliable function and use.

[8] Product specification may change without notice; actual product may vary from picture.

[9] Dimensions and weights are for reference only.

TASER International reserves the right to change this specification without notice.
Bluetooth is a trademark of the Bluetooth SIG.
Axon Signal is a trademark of TASER International, Inc. Axon Flex is a trademark of TASER International, Inc., registered in the US. AXONflex is a trademark of TASER International, Inc., registered in AU, the EU, and the US. TASER and © are trademarks of TASER International, Inc., registered in AU, CA, the EU, and the US. All rights reserved. © 2015 TASER International, Inc.