AXON Fleet

HD IN-CAR VIDEO. EPIC PRICE.

The power of the cloud, now in your car

INNOVATION HITS THE ROAD

Bold Price | Plug & Play Functionality | Cloud-Connected Platform

Axon Fleet is a breakthrough in-car video system that offers advanced functionality at an unheard-of price: 90% less than traditional systems. It incorporates Axon Signal technology to automatically activate during critical situations, allowing you to focus on the action. A wide-angle lens and HD video ensure you'll capture every second at top quality. The flexible design allows you to swap cameras in a matter of seconds and keeps your vehicles out of the shop and on the road. Axon Fleet lets you access a platform that connects data and people from capture to courtroom.

800-978-2737 axon.io/fleet

AXON FLEET FEATURES AND BENEFITS

RETINA HD VIDEO: The industry's best low-light video now records in HD.

WIRELESS ACTIVATION: Axon Signal turns the camera on with light bar, TASER devices and other sensor activation.

REAR-FACING CAMERA: Capture what happens inside the car, too.

WIRELESS OFFLOAD: Evidence uploads to the cloud via Wi-Fi or the Axon Dock.

NO MAINTENANCE DOWNTIME: Trade out units in a few seconds without tearing the car apart.

PRE-EVENT BUFFER: Capture up to 2 minutes before an event.

ADVANCED SECURITY: Evidence is encrypted at rest on the camera to protect data at all times.

MOBILE APP: Stream, tag and replay any camera's videos right on your phone with Axon View.

UNPRECEDENTED PRICE: Costs 90% less than traditional in-car video systems.

CONTINUOUS UPGRADES: Full-featured solution that receives new capabilities via software upgrades every 30 days.

APP AVAILABLE FOR APPLE AND ANDROID

AXON FLEET SPECIFICATIONS

VIDEO RESOLUTION Configurable up to 1080p

WEATHER RESISTANCE IP67 (IEC 60529)

CORROSION RESISTANCE MIL-STD-810G METHOD 509.5 (SALT FOG)

FIELD OF VIEW 142 degrees

OPERATING TEMPERATURE -40 °F to 122 °F / -40 °C to 50 °C

DROP TEST 6 feet

HUMIDITY 80% non-condensing

WARRANTY 1 year from date of receipt

RECORDING CAPACITY Up to 70 hours depending on resolution

Android is a trademark of Google, Inc., and Apple and the Apple logo are trademarks of Apple, Inc. The Android robot is reproduced or modified from work created and shared by Google and used according to terms described in the Creative Commons 3.0 Attribution License.

AXON, Axon, Axon Fleet, Axon Signal, Axon View, TASER, and are trademarks of TASER International, Inc., some of which are registered in the US and other countries. For more information, visit www.taser.com/legal. All rights reserved. © 2016 TASER International, Inc.

MPC0233 REV B

Title: Axon Fleet System Camera Specifications
Department: Research and Development
Version: 1.0
Release Date: 7/11/2016

Axon Fleet Camera Models

Model	Model No.	Color
Axon Fleet system camera	AX1001	Black

Specifications

1. Operating temperature range: −35 °F to 122 °F [−37 °C to 50 °C]
2. Storage temperature range: −35 °F to 176 °F [−37 °C to 80 °C]
3. Relative humidity: 80 percent .
4. Drop test: 6-foot [1.8-meter].
5. Up to 30 frames per second.
6. 640 x 480 VGA video resolution
   1280 x 720 HD video resolution
   1920 x 1080 HD video resolution
7. Gets power from the emergency vehicle's electrical system.[1]
8. Bluetooth 4.0.
9. USB 2.0.
10. Wi-Fi 802.11n at 5 GHz and 2.4 GHz.
11. Bit rate: 2 megabits per second to 12 Mbps (depending on the quality setting).

Features

1. Compatible with the Axon View XL mobile data terminal/mobile data computer (MDT/MDC) program to:
   - Start and stop recording
   - View video feeds live
   - Review and replay videos
   - Add meta data (e.g., case ID)
2. EVENT button to start and stop recording manually, if needed.
3. On/Off slide switch to power the device.
4. Battery button and battery LED to indicate remaining battery capacity.[1]
5. Operation LED on the back of the camera and front LED indicate camera status.
6. Configurable bit rate (multiple settings to optimize file size and upload speed).
7. Full color audiovisual camera.
8. Approximately 11 hours video storage under highest quality recording settings; up to 23 hours storage under medium quality recording settings; and up to 70 hours storage available at lowest quality recording setting.
9. 142° diagonal field of view camera lens.
10. Retina Low-Light capability less than 0.1 lux.
11. Playback, upload, and download via TASER software applications.
12. GPS tagging capability available through the Axon View XL program via Bluetooth technology. Streaming capability is available through the Axon View XL program via Wi-Fi technology.
13. Compatible with the Axon Signal Unit (ASU) and Signal Performance Power Magazine (SPPM).

Physical Characteristics[2,3]

Dimensions			
Width (W)	Height (H) (fully extended)	Depth (D)	Weight
2.76 in [7 cm]	7.37 in [18.7 cm]	1.58 in [4 cm]	5.0 oz [142 g]

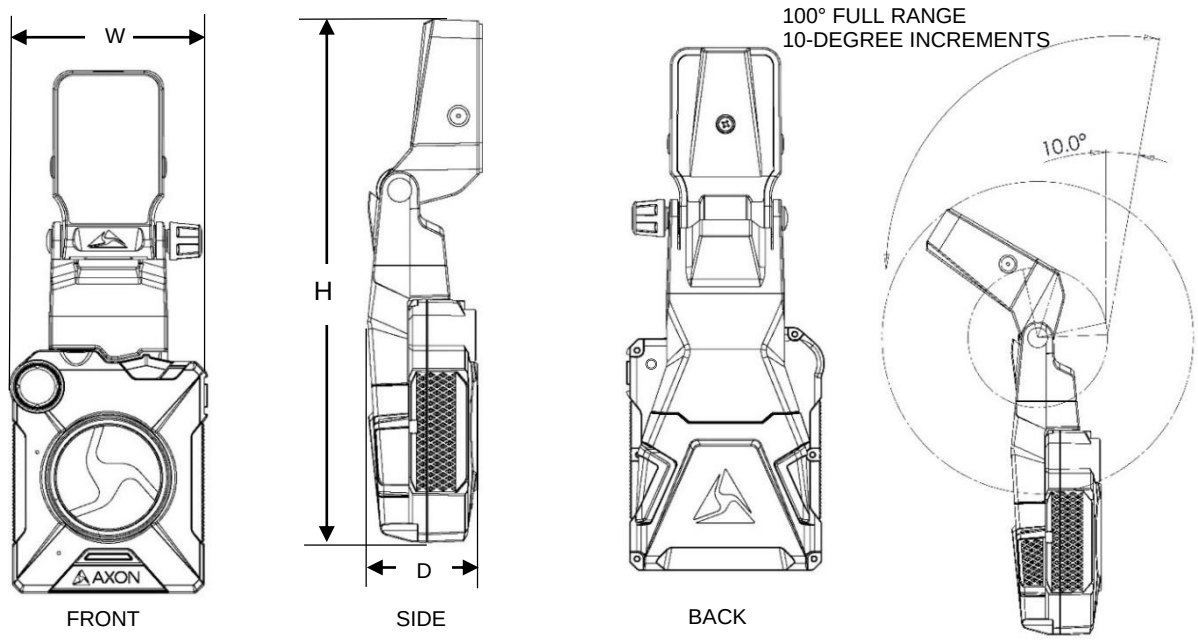

[1] See the *Axon Fleet Power Unit* specifications for information about the Axon Fleet camera's backup power source.
[2] Product specification may change without notice; actual product may vary from picture.
[3] Dimensions and weights are for reference only.

TASER International, Inc. reserves the right to change this specification without notice.
Android is a trademark of Google, Inc., Bluetooth is a trademark of the Bluetooth SIG, IOS is a trademark of Cisco, and Wi-Fi is a trademark of the Wi-Fi Alliance.
, AXON, Axon, Axon Fleet, Axon Signal, TASER, and are a trademarks of TASER International, Inc., some of which are registered in the US and other countries. For more information, visit www.taser.com/legal. All rights reserved. © 2016 TASER International, Inc.

Title: Axon Fleet Power Unit Specifications
Department: Research and Development
Version: 1.0
Release Date: 7/11/2016

AXON

Product Models[1]		
Model	Model No.	Color
Axon Fleet Power Unit	AX1002	Clear on top, black on bottom

Specifications	Features
Housing material: Plastic Operating and storage temperature range: −35 °F to 176 °F [−37 °C to 80 °C] Relative humidity: 80 percent Rechargeable lithium ion battery. Recharge time: Approximately 3 hours.	1. Power source for the Axon Fleet camera when an emergency vehicle's engine is turned off. 2. Camera battery LED to indicate remaining battery charge. 3. Provides power for approximately 4 hours of EVENT mode operation for the Axon Flex camera. 4. e-mark compliant

Physical Characteristics[2]					
Width 1 (W1)	Width 2 (W2)	Depth 1 (D1)	Depth 2 (D2)	Height (H)	Weight
4.54″ (11.53 cm)	5.7″ (cm)	2.59″ (14.48 cm)	2.98″ (7.57 cm)	1.63″ (4.14 cm)	9.8 oz (279 g)

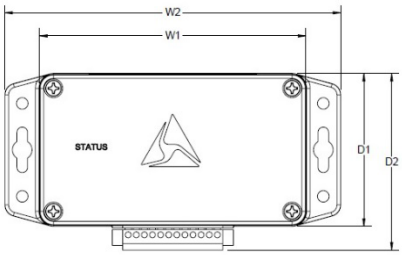

Top View

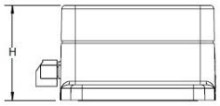

Side View

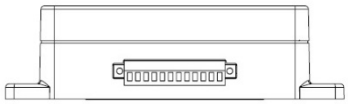

Front View

[1] Product specification may change without notice; actual product may vary from picture.
[2] Dimensions and weights are for reference only.