This document has been prepared by Omnicell exclusively for:

State of Nevada Purchasing Division -Division of Public and Behavioral Health

LEASING OF PHARMACEUTICAL DISPENSING SYSTEM AND RELATED SERVICES
June 13, 2016

TECHNICAL PROPOSAL

Omnicell

TAB I

Presented by Omnicell, Inc.
590 E. Middlefield Rd.
Mountain View, CA 94043
Phone (toll-free): (800) 850-6664
E-mail: info@omnicell.com
Fax: (650) 251-6266

Prepared for
STATE OF NEVADA PURCHASING DIVISION -DIVISION OF PUBLIC AND BEHAVIORAL HEALTH

Teri Becker
Purchasing Officer
515 E. Musser Street
Suite 300
Carson City, NV 89701
775-684-0178
tbecker@admin.nv.gov

June 13, 2016

Instructions:

Part I A – Technical Proposal	
RFP Title:	Pharmaceutical Dispensing System
RFP:	3249
Vendor Name:	Omnicell, Inc.
Address:	590 Middlefield Rd., Mountain View, CA 94043
Opening Date:	June 13, 2016
Opening Time:	2:00 PM

One (1) original marked “MASTER”; and Six (6) identical copies.

Your Account Representative:
Blake Heimall
System Sales Director
Omnicell, Inc.
949-244-5475
blake.heimall@omnicell.com

TAB II

TABLE OF CONTENTS

TAB I i

TAB II 2

Table of Contents 2

TAB III 3

VENDOR INFORMATION SHEET 3

TAB IV 4

STATE DOCUMENTS 4

TAB V 9

ATTACHMENT B 9

TAB VI 13

Section 3 13

TAB VII 23

TAB VIII 33

Attachment G – Proposed Staff Resume 33

TAB IX 34

OTHER INFORMATIONAL MATERIAL 34

Terms & Conditions 51

Attachments 52

Master Agreement 52

Certificate of Insurance 52

Amendment 1 52

Amendment 2 52

Sample Implementation Plan 52

Omnicell Equipment Specifications 52

TAB III

VENDOR INFORMATION SHEET

VENDOR INFORMATION SHEET FOR RFP 3249

V1	Company Name	Omnicell, Inc.

V2	Street Address	590 Middlefield Road

V3	City, State, ZIP	Mountain View, CA 94043

V4	Telephone Number		
	Area Code: 949	Number: 244-5475	Extension:

V5	Facsimile Number		
	Area Code: 650	Number: 251-6266	Extension:

V6	Toll Free Number		
	Area Code: 800	Number: 850-6664	Extension:

V7	***Contact Person for Questions / Contract Negotiations, including address if different than above***
	Name: Blake Heimall
	Title: System Sales Director
	Address: Los Angeles, CA
	Email Address: blake.heimall@omnicell.com

V8	Telephone Number for Contact Person		
	Area Code: 949	Number: 244-5475	Extension:

V9	Facsimile Number for Contact Person		
	Area Code: 650	Number: 251-6266	Extension:

V10	***Name of Individual Authorized to Bind the Organization***	
	Name: Troy Hilsenroth	Title: VP & General Manager, Vendor Solutions Sales

V11	Signature ***(Individual must be legally authorized to bind the vendor per NRS 333.337)***	
	By executing this RFP response Omnicell is not agreeing to State of Nevada terms and conditions and a mutual negotiation of terms and conditions shall be required.	Date: 6/13/2016

TAB IV

STATE DOCUMENTS

ATTACHMENT A: CONFIDENTIALITY AND CERTIFICATION OF INDEMNIFICATION

Submitted proposals, which are marked "confidential" in their entirety, or those in which a significant portion of the submitted proposal is marked "confidential" **will not** be accepted by the State of Nevada. Pursuant to NRS 333.333, only specific parts of the proposal may be labeled a "trade secret" as defined in NRS 600A.030(5). All proposals are confidential until the contract is awarded; at which time, both successful and unsuccessful vendors' technical and cost proposals become public information.

In accordance with the Submittal Instructions of this RFP, vendors are requested to submit confidential information in separate binders marked "**Part I B Confidential Technical**" and "**Part III Confidential Financial**".

The State will not be responsible for any information contained within the proposal. Should vendors not comply with the labeling and packing requirements, proposals will be released as submitted. In the event a governing board acts as the final authority, there may be public discussion regarding the submitted proposals that will be in an open meeting format, the proposals will remain confidential.

By signing below, I understand it is my responsibility as the vendor to act in protection of the labeled information and agree to defend and indemnify the State of Nevada for honoring such designation. I duly realize failure to so act will constitute a complete waiver and all submitted information will become public information; additionally, failure to label any information that is released by the State shall constitute a complete waiver of any and all claims for damages caused by the release of the information.

This proposal contains Confidential Information, Trade Secrets and/or Proprietary information as defined in ***Section 2 "ACRONYMS/DEFINITIONS."***

Please initial the appropriate response in the boxes below and provide the justification for confidential status.

Part I B – Confidential Technical Information			
YES		NO	X
Justification for Confidential Status			

A Public Records CD has been included for the Technical and Cost Proposal			
YES		NO (See note below)	X
Note: By marking "NO" for Public Record CD included, you are authorizing the State to use the "Master CD" for Public Records requests.			

Part III – Confidential Financial Information			
YES	X	NO	
Justification for Confidential Status			

Omnicell, Inc.

Company Name

Signature

By executing this RFP response Omnicell is not agreeing to State of Nevada terms and conditions and a mutual negotiation of terms and conditions shall be required.

Troy Hilsenroth 6/13/2016

Print Name Date

ATTACHMENT C – VENDOR CERTIFICATIONS

Vendor agrees and will comply with the following:

(1) Any and all prices that may be charged under the terms of the contract do not and will not violate any existing federal, State or municipal laws or regulations concerning discrimination and/or price fixing. The vendor agrees to indemnify, exonerate and hold the State harmless from liability for any such violation now and throughout the term of the contract.

(2) All proposed capabilities can be demonstrated by the vendor.

(3) The price(s) and amount of this proposal have been arrived at independently and without consultation, communication, agreement or disclosure with or to any other contractor, vendor or potential vendor.

(4) All proposal terms, including prices, will remain in effect for a minimum of 180 days after the proposal due date. In the case of the awarded vendor, all proposal terms, including prices, will remain in effect throughout the contract negotiation process.

(5) No attempt has been made at any time to induce any firm or person to refrain from proposing or to submit a proposal higher than this proposal, or to submit any intentionally high or noncompetitive proposal. All proposals must be made in good faith and without collusion.

(6) All conditions and provisions of this RFP are deemed to be accepted by the vendor and incorporated by reference in the proposal, except such conditions and provisions that the vendor expressly excludes in the proposal. Any exclusion must be in writing and included in the proposal at the time of submission.

(7) Each vendor must disclose any existing or potential conflict of interest relative to the performance of the contractual services resulting from this RFP. Any such relationship that might be perceived or represented as a conflict should be disclosed. By submitting a proposal in response to this RFP, vendors affirm that they have not given, nor intend to give at any time hereafter, any economic opportunity, future employment, gift, loan, gratuity, special discount, trip, favor, or service to a public servant or any employee or representative of same, in connection with this procurement. Any attempt to intentionally or unintentionally conceal or obfuscate a conflict of interest will automatically result in the disqualification of a vendor's proposal. An award will not be made where a conflict of interest exists. The State will determine whether a conflict of interest exists and whether it may reflect negatively on the State's selection of a vendor. The State reserves the right to disqualify any vendor on the grounds of actual or apparent conflict of interest.

(8) All employees assigned to the project are authorized to work in this country.

(9) The company has a written equal opportunity policy that does not discriminate in employment practices with regard to race, color, national origin, physical condition, creed, religion, age, sex, marital status, sexual orientation, developmental disability or handicap.

(10) The company has a written policy regarding compliance for maintaining a drug-free workplace.

(11) Vendor understands and acknowledges that the representations within their proposal are material and important, and will be relied on by the State in evaluation of the proposal. Any vendor misrepresentations shall be treated as fraudulent concealment from the State of the true facts relating to the proposal.

(12) Vendor must certify that any and all subcontractors comply with Sections 7, 8, 9, and 10, above.

(13) The proposal must be signed by the individual(s) legally authorized to bind the vendor per NRS 333.337.

Omnicell, Inc.

Vendor Company Name

Vendor Signature

By executing this RFP response Omnicell is not agreeing to State of Nevada terms and conditions and a mutual negotiation of terms and conditions shall be required.

Troy Hilsenroth — 6/13/2015

Print Name — Date

This document must be submitted in Tab IV of vendor's technical proposal

LICENSING AGREEMENTS

Copies of any vendor licensing agreements and/or hardware and software maintenance agreements.

Subject to the terms and conditions of the Master Agreement (including Customer's obligation to pay to Omnicell any and all amounts when due), Omnicell grants to Customer a limited, nonexclusive, fully paid up, non-transferable , non-sublicensable license , in object code form only, to use such Licensed Software for Customer's internal business operations at the designated Customer sites on the Delivered Products within which such Licensed Software is embedded and/or installed by such number of users and during such period of time as set forth on the applicable Pricing Supplement, or, where Omnicell has installed its server software on any Customer-provided servers. Please refer to our terms and conditions as found in the current Master Agreement, specifically Schedule C, Software License Schedule.

CERTIFICATIONS

Copies of applicable certifications and/or licenses.

Omnicell cabinets are Canadian Standards Association (CSA) and Conformity European (CE) certified. They are exempt from Food & Drug Administration (FDA) certifications. Omnicell cabinets meet Fire Protection Standards with their CSA and CE certification. Omnicell is also ISO 9001:2000 compliant.

TAB V

ATTACHMENT B

TECHNICAL PROPOSAL CERTIFICATION OF COMPLIANCE WITH TERMS AND CONDITIONS OF RFP

I have read, understand and agree to comply with ***all*** the terms and conditions specified in this Request for Proposal.

YES N/A I agree to comply with the terms and conditions specified in this RFP.

NO N/A I do not agree to comply with the terms and conditions specified in this RFP.

If the exception and/or assumption require a change in the terms in any section of the RFP, the contract, or any incorporated documents, vendors ***must*** provide the specific language that is being proposed in the tables below. If vendors do not specify in detail any exceptions and/or assumptions at time of proposal submission, the State will not consider any additional exceptions and/or assumptions during negotiations.

Notwithstanding any provision to the contrary, State of Nevada Purchasing Division -Division of Public and Behavioral Health hereby acknowledges and recognizes that if Omnicell's proposal is accepted, such acceptance will require that terms and conditions will be, at that time, mutually negotiated and agreed to by both parties. As such and upon mutual resolution, both parties will be contractually obligated to carry out their respective responsibilities as described therein.

Omnicell, Inc.

Company Name

Signature

Troy Hilsenroth

Print Name

6/13/2016

Date

Vendors MUST use the following format. Attach additional sheets if necessary.

EXCEPTION SUMMARY FORM

EXCEPTION #	RFP SECTION NUMBER	RFP PAGE NUMBER	EXCEPTION (Complete detail regarding exceptions must be identified)
1	11.2	32	Except in the event of a third party lease
2	11.2.2	32	The awarded vendor shall maintain, for the duration of its contract, insurance coverages as set forth in Omnicell's certificate of insurance.

EXCEPTION #	RFP SECTION NUMBER	RFP PAGE NUMBER	EXCEPTION (Complete detail regarding exceptions must be identified)
3	11.3.1.1	34	The State may undertake or award supplemental contracts for work related to this project or any portion thereof. The contractor shall use reasonable efforts to cooperate with such other contractors and the State. Notwithstanding the foregoing, the contractor shall not be required to provide any confidential or proprietary information to any other contractor or third party. The State understands that all products and services offered by vendor must be procured through vendor.
4	11.3.1.2	34	Need clarification
5	11.3.3	34	Need clarification
6	11.3.8	36	Will address and clarify with IT. Because data is stored on customer network, encryption is done on customer end not Omnicell.
7	11.4.1 – 11.4.22	36-38	The warranty provided by Omnicell is set forth in the Omnicell master agreement. Omnicell also offers a robust Support Service Plan (in Schedule D of the master agreement) that reflects the efforts to keep all products properly performing in material compliance with their functional specifications, as well as our fix and replace obligations.
8	11.4.2.3 – 11.4.2.7	39-40	The indemnifications offered by Omnicell are set forth in the Omnicell master agreement
9	11.4.2.8	40	Included in Omnicell Master. Contractor agrees to deliver the goods as indicated in the contract, and upon delivery, title to the goods shall pass to the State unless otherwise stated in the contract. The State shall have the right to inspect the goods in accordance with vendor's master agreement terms and conditions. Unless otherwise stated in the contract, risk of loss from any casualty, regardless of the cause, shall be on contractor until the goods have been delivered and title has passed to the State. Unless otherwise stated on an applicable contract, Vendor acknowledges that it shall accept delivery of any products within twelve (12) months of providing vendor with an executed contract for such products The State's acceptance of delivery of any product purchased pursuant to the contract will be deemed the State's acknowledgement that (a) all of the products listed in the applicable contract have been received, and (b) such products show no obvious signs of physical damage. The State's acceptance of delivery does not constitute or imply the State's acceptance of installation or that the products are in working order.

EXCEPTION #	RFP SECTION NUMBER	RFP PAGE NUMBER	EXCEPTION (Complete detail regarding exceptions must be identified)
10	11.4.2.9	40	These concerns are addressed in the Omnicell master agreement and in the clause above
11	11.4.2.10	40	specified in the contract, is F.O.B. to the delivery address specified above, shipping and freight will be arranged and invoiced by vendor but paid by the State. The State will pay all taxes, duties, levies, tariffs or similar charges of any kind (including sales, use, property, withholding or value added taxes) imposed by any federal, state, local, or other governmental entity for products or services provided under the contract, excluding only taxes based solely on vendor's net income (collectively, **"Taxes"**). The State agrees to pay any invoices for Taxes in a timely manner. In the event the State is exempt from any Taxes, the State shall provide contractor with a tax exemption certificate acceptable to the applicable taxing authority and shall complete vendor's tax exemption form. Unless otherwise specified in the contract, payment for the products and services shall be made by warrant drawn on the State of Nevada (in accordance with Nevada law) and mailed to contractor. All amounts due under the agreement will be invoiced upon shipment Payment will be due and payable by the State thirty (30) days after the date of invoice. Any amounts due not received by vendor within fifteen (15) days of the due date will be subject to (a) a late fee of one and one half percent (1 1/2%) per month, or the maximum charge permitted by law, whichever is less, and (b) a service charge of five percent (5%) of the amounts overdue.
12	11.4.2.11	41	The contract shall be governed by the laws of Nevada, without giving effect to any principle that would require the application of the laws of another jurisdiction.
13	Attach C. (1)	45	The indemnifications are set forth in Omnicell's master agreement
14	Attach E	48	Indemnification Clause - The indemnifications offered by Omnicell are set forth in the Omnicell master agreement
15	Attach E	48	Insurance Requirements - NOTE that if any of the work performed is subcontracted, Omnicell must make sure the subcontractor meets the same insurance requirements outlined here
16	Attach E	48	Workers Comp Section 3a. Clarification Needed
17	Attach D -	47	Lease of Equipment – Omnicell to work with the state of Nevada, and the 3rd party leasing company to finalize lease agreement

ASSUMPTION SUMMARY FORM

ASSUMPTION #	RFP SECTION NUMBER	RFP PAGE NUMBER	ASSUMPTION (Complete detail regarding assumptions must be identified)

This document must be submitted in Tab V of vendor's technical proposal

TAB VI

SECTION 3

SCOPE OF WORK

3.1 PROJECT LOCATIONS

3.1.1. Division of Public and Behavioral Health (DPBH)
Rawson Neal Psychiatric Hospital
1650 Community College Dr., Las Vegas, Nevada 89146

Rawson Neal Psychiatric Hospital provides in-patient care for individuals in Clark County with serious mental illnesses. There are 190 licensed beds at Rawson-Neal Psychiatric Hospital comprising 9 units/pods. All beds are licensed as acute care psychiatric beds. There are a total of 9 units/pods requiring one each dispensing station (with one exception) and scan station for total of 10 dispensing stations and 9 scan stations.

3.1.2. Division of Public and Behavioral Health (DPBH) Stein Hospital
6161 West Charleston Boulevard, Las Vegas, Nevada 89146

Stein Hospital provides in-patient forensic mental health services in a secure facility to offenders who are referred from the court system so their competency can be restored. There are 55 licensed beds in Stein Hospital comprising three units/pods. There are a total of 4 units/pods requiring one each dispensing station and scan station for total of 4 dispensing stations and 4 scan stations.

3.1.3. Division of Child and Family Services, (DCFS),
Southern Nevada Child and Adolescent Services (SNCAS)
Desert Willow Treatment Center (DWTC)
6171 West Charleston Boulevard, Las Vegas, Nevada 89146

Desert Willow Treatment Center (DWTC) is operated by Southern Nevada Child and Adolescent Services (SNCAS) and provides 24-hour, 7-day per week treatment programs. The Agency has a capacity of 58 beds, housing both female and males from ages 6 years to 18 years of age. There are a total of 5 units/pods requiring one each dispensing station and scan station for total of 5 dispensing stations and 5 scan stations.

3.1.4. Division of Public and Behavioral Health (DPBH)
Dini Townsend Psychiatric Hospital
480 Galletti Way, Sparks, Nevada 89431

Dini Townsend Psychiatric Hospital provides in-patient care for individuals in Clark County with serious mental illnesses. There are 70 licensed beds at Dini Townsend

Psychiatric Hospital comprising 4 units/pods. All beds are licensed as acute care psychiatric beds. There are a total of 4 units/pods requiring one each dispensing station and scan station for total of 4 dispensing stations and 4 scan stations.

3.1.5. Division of Public and Behavioral Health (DPBH)
Lake's Crossing Center
500 Galletti Way, Sparks, Nevada 89431

Lake's Crossing Center provides in-patient forensic mental health services in a maximum security facility to offenders who are referred from the court system so their competency can be restored. There are 70 licensed beds in Lake's Crossing Center comprising three units/pods. There are a total of 3 units/pods requiring one each dispensing station and scan station for total of 3 dispensing stations and 3 scan stations.

3.2 DESCRIPTION OF SERVICES

3.2.1. Automatic Dispensing Machines must integrate and interface seamlessly with existing software applications, specifically My Avatar;

Yes. Omnicell interface services comply with HL7 standards to exchange information with various hospital systems and are capable of supporting other communication formats as needed. Interfaces flow through several vendors' interface engine products. We are also capable of interfacing with any willing vendor. Omnicell has written over 8000 active interfaces to various systems, including interfaces according to other vendors' proprietary interface formats and communication protocols. Our systems are designed to easily work and exchange data with existing facility information systems. When the Omnicell system has been installed, all interfaces and the integrated database will provide a seamless, consistent system that is easy to use.

3.2.2. Real-time 24/7/365, hardware and software technical assistance flowing to Hospital IT and Pharmacy staff, that is dedicated specifically to this account to provide prompt in-person (within 1 hour) response and remote assistance;

Omnicell's standard support package includes 24/7/365 coverage. Phone response time is typically less than one minute during the hours of 6:00 a.m. to 6:00 p.m. Central Standard Time, with a guaranteed response within 30 minutes during those hours. Support is provided from our Chicago area facilities (Waukegan IL). After hours phone response time is typically within 30 minutes, with a guaranteed response within two (2) hours.

Omnicell's vSuite's IDM technology allows the system to automatically identify some anomalies, parameter variances, and emerging trends before they become problematic; sending updates to Omnicell's help desk on the health of customer systems and automatically notifies help desk technicians of some reported events. This allows the technician to immediately investigate any possible issues. vSuite is Internet-based, firewall-friendly and extremely secure.

3.2.3. Remote access from any designated computer in the network with the ability for IT/Pharmacy to reset systems remotely;

Omnicell's software support tool, vSuite Proactive Remote Monitoring, serves as a "watch dog" monitoring your ADM system to ensure it is functioning properly. vSuite's IDM technology allows the system to automatically identify some anomalies, parameter variances, and emerging trends before

they become problematic; sending updates to Omnicell's help desk on the health of customer systems and automatically notifies help desk technicians of some reported events. This allows the technician to immediately investigate any possible issues. vSuite is Internet-based, firewall-friendly and extremely secure.

3.2.4. Server available in both physical and virtual platforms;

Omnicell supports an Omnicell turnkey solution for physical servers where we provide the hardware. We also support virtual servers where we supply a virtual appliance that is then loaded on the customers VM Infrastructure.

3.2.5. Windows 7 or newer operating system;

Omnicell's workstation operating system is Windows 7.

3.2.6. Biometric user identification;

With the G4 platform, Omnicell introduces a completely redesigned biometric ID system. Touch & Go G4 not only incorporates state-of-the-art biometrics hardware and software, but it also features an intelligent user interface that interactively guides users through the enrollment process every step of the way. In developing the new Touch & Go G4 system, Omnicell consulted with the leading independent biometric technology experts and sought feedback from current users. User experience with the new system has been overwhelmingly positive.

3.2.7. Touchscreen and keyboard interface;

The system is available with a 15" color touch screen making the user interface intuitive and easy to navigate through. The screen is readily identifiable and positioned at a height that will accommodate 90% of users. All Omnicell cabinets have full function keyboards made of non-latex rubber to protect from spills.

3.2.8. Flexible configuration (drawer sizes and pockets) capacity of 300 medications or more;

Omnicell's solutions are built to fit your needs and have the ability to allow for growth in the future.

- Flexible Modular Design: Rather than providing a one size fits all approach that other vendors utilize, Omnicell offers a Pharmacist based consultative approach where we learn about your current and future needs and assist you in creating safe and effective medication delivery systems. Automated pharmacy management systems are available in a modular design which allows cabinets to be configured to meet the unique needs of each clinical area. High and low security areas of different sizes with unit dose, single dose, locking, sensing, matrix or guiding bins, accommodate every medication handling need.
- Customized configurations: Omnicell manufactures and sells a variety of medication dispensing drawers. Omnicell has a unique modular design which offers our customers the flexibility to configure drawers and cabinet sizes for each and every location in their facility, based on the number of meds that need to be stocked in each unit. Our customers have the flexibility to buy any combination of these drawers as individual units. Omnicell offers drawer solutions which have 4 individual bins, 6 individual bins, 12 individual bins, 24 individual bins, and 96 individual bins. These drawers come in different security levels and depths.
- Only purchase what you need: With the previously stated flexibility and customization options, Omnicell has the unique ability to incorporate its medication drawers into medication towers ("cells"). By offering this modular design Omnicell customers can minimize their capital costs by only buying exactly what each nursing station needs with the ability to provide future storage growth

at a very small fractional cost. The cost differential between adding one or two drawers into a unit versus adding an entire auxiliary cabinet can be substantial over the term of an agreement. For example, Omnicell systems can be configured to mirror our competitors with an OmniRx, OmniAux, and Aux Tower (see images below for Omnicell and the competitor's cabinet design).

Omnicell	Competitor	Competitor

As previously mentioned, Omnicell provides medication storage systems that can mirror our competitors configuration. However, due to the gains in the storage capacity of our taller cabinets, most of our customers select the "cell" design which is **only offered by Omnicell**. These cabinets help maximize the foot print and enable users to increase capacity with drawers and shelves. This configuration has more capacity than the traditional main, aux and tower set up displayed above and actually only takes up two "footprints" of a nursing station as shown below. The following illustrates how we provide **greater storage capacity** in a smaller footprint, at no additional cost:

Omn

Two

Other

Tower Main Aux 7-drawer

Each one two and three cell cabinet can be configured during the consultation to hold a maximum of 18 pharmacy Drawers per tower. For example:

- A One Cell could be configured to hold up to 18 Rx Drawers and have space above the computer for two shelves in an approx. 22.7" W x 77.5" H x 24.5" D footprint.
- A Two cell could be configured to hold up to 36 Rx Drawers with 7 shelves in an approx. 52" W x 77.5" H x 24.5" D footprint.
- A Three Cell could be configured to hold up to 54 Rx Drawers with up to 12 shelves in an approx. 76.5" W x 77.5" H x 24.5" D footprint.

Again, this cabinet design is a Main, Aux and Tower all in one, allowing stocking of medications, medical supplies and general supplies in the same cabinet. Zone access can be set up so that materials management (or respiratory therapy) can only access their zone for restocking, while the nurse is able to quickly remove all of the needed meds and supplies at one time (with no preselect needed on the supplies).

3.2.9. Proposals shall be for a dispensing unit (ADM) configured as follows:

3.2.9.1. Drawers

A. Maximum of one matrix drawer;

Omnicell complies with this requirement.

B. Secure drawer/drawers capable of single dose dispensing of approximately 200 doses of controlled medication; and

Omnicell complies with this requirement.

C. All remaining drawers "pockets" must all be capable of locking.

Omnicell complies with this requirement.

3.2.9.2 Remaining Components

A. Include bulk label printer.

Omnicell complies with this requirement.

B. All other components shall be standard issue cabinet components, but also meet any other requirements stated in this document.

Omnicell complies with this requirement.

3.2.9.3 Include detailed descriptions of all available drawer "pocket" configurations other than what is specified above. Explain if and/or how pocket types and/or sizes are interchangeable.

Omnicell complies with this requirement. Please refer to the attached Equipment Specifications.

3.2.9.4 Include detailed descriptions of all available drawer dimensions and pocket sizes (LxWxH) in addition to the above requirements.

Omnicell complies with this requirement. Please refer to the attached Equipment Specifications.

3.2.9.5 Include a detailed description of the dispensing machine cabinet dimensions (LxWxH) and any other pertinent cabinet information such as total number of drawers it can hold, touchscreen size, does the cabinet roll, etc.

Omnicell complies with this requirement. Please refer to the attached Equipment Specifications.

3.2.10. System must have barcoding scanning capabilities from Pharmacy to point-of-care to facilitate inventory management and reduce risk of medication variances.

Omnicell ensures the correct medication is dispensed by first making sure the correct medication is stocked using our SafetyStock feature and our guiding light technology. These two features working together help reduce potential medication errors by ensuring the right drug is stocked and the right drug is dispensed.

Stock

SafetyStock ensures the accuracy of technicians refilling the automated cabinets by using barcodes and hand held barcode readers. Utilizing Omnicell's guiding light technology will guide the user to restock and/or take the proper medication from the correct bin verifying that all of the medications have been restocked correctly, to the proper bin and drawer, and therefore reducing the possibility of dangerous medication errors.

Dispense

SafetyStock may also be set up for verification of nursing removals on "look-alike"-"sound-alike", narrow therapeutic, index medication and high-risk medications, on removal from the automated cabinet. The nurse will be prompted to scan the item barcode with the tethered scanner to ensure that the correct medication is being removed. Our guiding light technology also increases nursing satisfaction, as drawers or doors in which the medication is stored are clearly identified by the flashing light. Once the drawer is opened, the bin in which the medication is stored is also clearly identified by the flashing light ensuring that nurses are rapidly and accurately guided to the correct medication.

Return

SafetyStock can also be configured to allow a user to return a med to a bin only if a confirmed med scan and bin location scan match. SafetyStock configurations include scanning of medication, scanning of bin location, or scanning of both bin and medication.

3.2.11. System must allow nursing to scan physician orders to the pharmacy in real time, with the orders appearing in a "queue" so pharmacy staff can enter the order into patients profile and then attach the order electronically and paperlessly to the patient profile within the pharmacy software. All necessary equipment must be provided.

The OmniLinkRx product is a physician order software product that automates communication between nurses and the pharmacy. Generally the order routing process is configured so that new orders appear in both the "New Orders" queue and the queue specific to the department from which they came. Multiple pharmacists can access the "New Order" simultaneously.

3.2.12. System must have the ability to flag orders on the screen as "new" or "changed", using active dispensing alerts and displaying customized warnings/instructions.

Open orders are flagged and locked so that multiple users can read but not alter an order in use by another pharmacist.

3.2.13. System must have the ability to track medication expiration dates and a system for outdating medications before they expire.

Omnicell can track expiration dates utilizing either MM/YY or MM/DD/YY format, configurable per item. Upon restocking a medication, the technician is required to input the expiration date (per the format assigned to that item). As the expiration date approaches, the dispensing clinician is alerted to check expiration date.

3.2.14. System must have customized report generating capabilities to proactively monitor drug usage patterns, overrides, waste reconciliation and discrepancies for a minimum history of six (6) months.

The FoxFire! custom report writer software is provided with the OmniCenter. Omnicell has 9 standard reports that can be run at the cabinet, and over 120 at the server. All OmniCenter standard reports may be scheduled to run automatically. Reports may also be exported to Microsoft Excel, Access, and be distributed via e-mail (automatically, or manually). The FoxFire! report writer is provided to

allow the creation of custom reports should the standard reports not meet a need. In addition, Omnicell provides a Custom Reports Library online within our Customer Extranet. These are custom reports are created by Omnicell users to meet specific needs and can be accessed and shared by all Omnicell System users.

3.2.15. System must have customizable user setup with the ability to give different levels of user access.

Access levels and permissions can be limited by user type and medication type. Access controls are able to be changed by modifying the configuration file at each cabinet. Changes can be made by the system administrator to control: password length.

3.2.16. System must have ability to add temporary users and patients.

The system will require each temporary user to have a unique ID and password. Temporary access is granted for a configurable amount of time. Temporary patients can be created at the station, but temporary users are created by an administrator through the ICM Module.

3.2.17. System must have the ability to move/transfer one unit's dispensing machine's patients to a different dispensing unit either temporarily or permanently.

The patient medication transfer process can be supported by both pharmacy or nursing, depending on the hospital's specific procedures. When a patient transfers the nurse removes the patient specific medications for that patient. These medications can then be physically transferred with the patient. When the patient and the medications arrive at the new location, SinglePointe will have already assigned locations for these medications so the nurse just follows the on-screen prompts to store the items in the cabinet.

3.2.18. System must have the capacity for generating patient specific labels for bulk items, e.g., inhalers and multi-dose vials.

Exclusive to Omnicell, the integrated Medication Label Printer allows nurses to print patient- specific labels during medication issue for medications that won't be administered immediately; medications removed from their original packaging; and pre-mix intravenous IV admixtures and multi-use medications, such as topicals, inhalers and eye drops. The Medication Label Printer supports compliance with The Joint Commission National Patient Safety Goal 03.04.0 regarding labeling medications, and improves patient safety.

3.2.19. System must be of durable, reliable equipment capable of withstanding long term, repeated usage and potential user/patient abuse.

Omnicell dispensing systems are known for their durability and longevity. The operational longevity of our systems is essentially open-ended, since some of our systems are over ten (10) years old and still performing very well at Omnicell customer facilities. It is important to note that Omnicell's systems are made of all steel with fewer moving parts than our competition. This durable construction means less need for repairs, and less need for spare parts on site.

3.2.20. System must have sufficient workspace for placing Medication Administration Record (MAR) on ADM where they can be utilized.

Omnicell complies with this requirement.

3.2.21. System must produce transaction receipts for controlled and wasted/returned medications.

The system provides complete tracking for all transaction including user, and time/date stamps. The All transactions are reported on Omnicell's robust standard reports. All reports can be scheduled, printed, and emailed as desired.

3.2.22. System must have secure single dose controlled substance dispensing.

Omnicell provides two option types for single-dose dispensing:

Omnicell's OmniDispenser has the most recognized unit dose capability in healthcare automation. With OmniDispenser, access to medications is controlled and secure and restocking accuracy is improved. Upon selection of medication(s) stored within the OmniDispenser, the user is guided via guiding lights to a single drawer where only the medications (in the quantities selected) will be available. No other medications will be available and no count-back is required. The OmniDispenser can accommodate tablets, vials, ampules and syringes up to 45 line items per OmniDispenser.

Omnicell also offers FlexBin drawers for single-dose dispensing. Utilizing the same selection process, the user is guided to the appropriate drawer where the medication(s) are stored. Upon opening the drawer, the individual lids of each medication opens (sequentially upon close of the previous bin) and the single-dose is removed. No other medications are available and no count-back is required. FlexBin drawers are available in three types accommodating a maximum of 48 to 96 doses in any combination of medication line item. FlexBins can hold tablets, vials, ampules and syringes.

Key Features of both the OmniDispenser and FlexBins Include:

- Guiding light technology guides clinician to the appropriate drawer for medication removal.
- OmniDispenser: Guides the restock technician to the specific medication for increased accuracy.
- FlexBins: The open bins guide the restock technician.
- First-in/First-out functionality
- Touch-screen technology provides secure and quick access to medications
- Single-dose dispenser eliminates need to confirm remaining inventories of controlled substances (i.e., no count-backs)
- Push-button technology ensures accuracy in restocking
- Security facilitates better JCAHO compliance and other regulatory standards
- Modular design easily integrates into other Omnicell cabinets
- Up to 45 line items within one module of OmniDispenser.

3.2.23. System must have dispensing alerts of right alert, sound-a-like, look-a-like meds, pregnant patient and allergies, etc.

Omnicell's Dispensing Alerts are real time, comprehensive active alerts that: Provide the dispensing user information Provide information then require a response Ask a Yes or No question Ask multi-part questions and ask a follow-up question based on the response Omnicell's Dispensing Alerts may be customized for specific medications and medication groups. With this feature, customers have the ability to develop specific questions and gather responses during issue, return, or waste of a medication. This tool provides Indiana University Health with specific information about medication use, facilitates instruction and education during the decentralized medication-use process, and further increases patient safety. The customer can create any number of dispensing alerts with the answers available such as: free text, pick the best answer, and select multiple answers or no response (informational only). Additionally, this feature allows the customer to create secondary dispensing alerts based on an answer(s) to the primary dispensing alert.

3.2.24. System must have the ability to support multiple formularies at multiple sites with a simplified formulary setup and maintenance.
Yes, Omnicell can support multiple formularies.

3.2.25. System must have an integrated on-line medication reference library.
With the touch of a button from the Omnicell Automated Dispensing Cabinets, a clinician can access live drug information from Gold Standard's Clinical Pharmacology drug information database as well as pharmacy approved web-sites and the hospital intranet. This internet-based feature eliminates the need to update local databases via CD's. The Clinical Pharmacology database includes information on indications, dosing, adverse reactions, and drug interactions, as well as patient education information. Full-color drug photos are available to help verify a medication. Medication information is viewable by section (i.e. patient education, chemical structure, dosing, etc.) Any of this drug information can be printed at a network printer in English or Spanish at a sixth grade level as a patient education piece. Furthermore, clinicians may access this real-time clinical information without leaving the patient's profile and without interrupting the dispense cycle.

3.2.26. System must have the capability to print out patient medication information sheets.
Yes. Omnicell's system has the capability to print out patient medication information sheets.

3.2.27. Automatic Dispensing Machines must be newly manufactured – "Units that have not been previously used and are currently being marketed by the manufacturer." – Buyers Laboratory Inc., 2003 Multifunction Specification Guide. New machines consist of all new or remanufactured parts with no used parts or components and the marking engine must be new and not used or remanufactured. New equipment has never been under lease or placed as a demonstration or test machine, since original manufacture.
All systems are built to order. Omnicell has a unique modular design which offers our customers the flexibility to configure drawers and cabinet sizes for each and every location in their facility, based on the number of meds that need to be stocked in each unit. Our customers have the flexibility to buy any combination of these drawers as individual units.

3.3 VENDOR'S PROPOSALS

Vendor's proposals must, at a minimum, including the following:

3.3.1 Proposals must provide in detail how services will be performed;
Omnicell has provided the required details within our response to each question.

3.3.2 Delivery and installation at no cost to the State;
All costs associated with delivery and installation are included in the proposed Price Quote.

3.3.3 All contractor staff that will be entering the facilities must pass a background check;
Omnicell employees complete background screening before system deployments.

3.3.4 All maintenance and repairs will be provided by the contractor;

Our Support Service plans provide for on-site fix and/or replace of all components within the system by one of our trained service technicians, 24/7 access to our Technical Assistance Center and free access to system software version updates and upgrades to protect your investment. Support Service plans have guaranteed response times for both Help Desk and onsite service technicians.

3.3.5 Service and repair calls shall be responded to within 24 hours form the initial call;

Phone response time is typically less than one minute during the hours of 6:00 a.m. to 6:00 p.m. Central Standard Time, with a guaranteed response within 30 minutes during those hours.

3.3.6 All repairs must be completed within 72 hours following the initial notification;

If on-site repairs are needed a technician will be dispatched as soon as possible. Omnicell guarantees six (6) hour onsite response time under our Gold Level Service plan. Calls are prioritized based on the impact the reported problem has on the customer. Down pieces of equipment are given priority over equipment that is functioning but has minor problems. When onsite service is necessary to resolve a problem, dispatches for the onsite service are done as soon as the problem is diagnosed.

3.3.7 If a machine under-performs to the given requirements set forth by the contractor's proposal, manufacturer's specifications and terms of the lease, a new machine will be provided at no cost to the State; and

Omnicell systems are potentially mission critical to your operations. Omnicell customers require more than a typical workmanship standard warranty that provides for return to the manufacturer for repair or replacement when system fails. We offer service plans from day one of go live that recognize the higher level of service required to meet the needs of a mission critical system. Our Support Service plans provide for on-site fix and/or replace of all components within the system by one of our trained service technicians, 24/7 access to our Technical Assistance Center and free access to system software version updates and upgrades to protect your investment. Support Service plans have guaranteed response times for both Help Desk and onsite service technicians.

3.3.8 Vendors must submit with their proposals, a detailed proposed timeline for roll-out of the system. The current leases expire December 31, 2016 and the new system must be installed and operational not later than that date.

Omnicell will develop an installation and training schedule that will meet your needs and time frames. Omnicell Implementation Project Managers provide extensive implementation planning, configuration, education and consultative functions during a system implementation. All Implementation plans are customized based on a multitude of factors; however we have provided a Sample Implementation Plan for your review attached.

TAB VII

SECTION 4 – COMPANY BACKGROUND AND REFERENCES

VENDOR INFORMATION

4.1.1. Vendors must provide a company profile in the table format below.

Question	Response
Company name:	Omnicell, Inc.
Ownership (sole proprietor, partnership, etc.):	Corporation
State of incorporation:	Incorporated in California in 1992; re-incorporated in Delaware, 2001, as Omnicell, Inc.
Date of incorporation:	1992 & 2001
# of years in business:	Since 1992
List of top officers:	– Randall A. Lipps, Chairman, President, and Chief Executive Officer – J. Christopher Drew, Executive Vice President, Sales and Marketing – Dan S. Johnston, Executive Vice President and Chief Legal and Administrative Officer – Peter Kuipers, Executive Vice President and Chief Financial Officer – Nhat H. Ngo, Executive Vice President, Strategy and Business Development
Location of company headquarters:	590 Middlefield Road, Mountain View, CA 94043
Location(s) of the company offices:	Omnicell Waukegan Office: 3661 Burwood Drive Waukegan, IL 60085-9100 Phone: (800) 649-2207 Fax: (847) 596-3402 Omnicell Nashville Office: 443 Donelson Pike Point Place II Suite 200 Nashville, TN 37214 Phone: (615) 564-7299

Question	Response
	Fax: (615) 564-7297 Omnicell Pandora Headquarters: 10 Victor Square, Suite 250 Scotts Valley, CA 95066 Phone: (831) 227-2501 Fax: (831) 439-9194 Dubai Office: United Arab Emirates Dubai, Academic City Block No. 3, Office No. 10 Phone: +97150 367 44 57
Location(s) of the office that will provide the services described in this RFP:	Our front line support is located in Waukegan, IL. Field service will be dispatched though our local Field Service Engineers.
Number of employees locally with the expertise to support the requirements identified in this RFP:	Omnicell will be utilizing experienced, trained in-house staff, the number of employees will be determined during pre-installation meetings.
Number of employees nationally with the expertise to support the requirements in this RFP:	As of December 31, 2015, we had a total of 1,455 employees, including: – 285 manufacturing – 197 research and development – 146 direct, corporate and inside sales – 136 sales administration – 11 field operations pre sales – 211 customer service – 205 field operations – 82 marketing – 182 general and administrative Omnicell has created a national service organization with our call center based out of Waukegan, Ill. The overall organization consists of technical support, field service, and parts logistics teams which are equipped to respond to customer needs and resolve issues with speed and efficacy. Our remote access capabilities allow help desk personnel and field engineers to monitor systems performance and rapidly deliver effective solutions. State-of-the-art call tracking, field service, and knowledgebase tools allow technical

Question	Response
	personnel to quickly access key product information, account status and service history. Omnicell technical support engineers are able to effectively resolve most reported problems without having to send a representative on site. Should your facility have a need for an onsite technician, a local Omnicell representative will be dispatched.
Location(s) from which employees will be assigned for this project:	Each Omnicell account has a primary, secondary and tertiary engineer assigned to provide the "depth of support" needed to maintain mission critical systems. If the first level support cannot resolve the problem, it is escalated to the second level engineering support. Omnicell maintains it own exclusive field service team and Help Desk organization which supports the entire Omnicell product line. Technical Service Engineers (TSEs) work directly for Omnicell and report into a regional service manager who can provide additional technical and resource support as required.

4.1.2. **Please be advised**, pursuant to NRS 80.010, a corporation organized pursuant to the laws of another state must register with the State of Nevada, Secretary of State's Office as a foreign corporation before a contract can be executed between the State of Nevada and the awarded vendor, unless specifically exempted by NRS 80.015.

4.1.3. The selected vendor, prior to doing business in the State of Nevada, must be appropriately licensed by the State of Nevada, Secretary of State's Office pursuant to NRS76. Information regarding the Nevada Business License can be located at http://sos.state.nv.us.

Question	Response
Nevada Business License Number:	E0660652008-7
Legal Entity Name:	Omnicell, Inc.

Is "Legal Entity Name" the same name as vendor is doing business as?

Yes	X	No	

If "No", provide explanation.

4.1.4. Vendors are cautioned that some services may contain licensing requirement(s). Vendors shall be proactive in verification of these requirements prior to proposal submittal. Proposals that do not contain the requisite licensure may be deemed non-responsive.

4.1.5. Has the vendor ever been engaged under contract by any State of Nevada agency?

Yes		No	X

Omnicell has the privilege of working with many hospitals and health care facilities throughout the state of Nevada. Currently, we do not service any Nevada state facilities; however, we do provide automation solutions to numerous state hospitals and correctional facilities located in California and other states.

If "Yes", complete the following table for each State agency for whom the work was performed. Table can be duplicated for each contract being identified.

Question	Response
Name of State agency:	
State agency contact name:	
Dates when services were performed:	
Type of duties performed:	
Total dollar value of the contract:	

4.1.6. Are you now or have you been within the last two (2) years an employee of the State of Nevada, or any of its agencies, departments, or divisions?

Yes		No	X

If "Yes", please explain when the employee is planning to render services, while on annual leave, compensatory time, or on their own time?

If you employ (a) any person who is a current employee of an agency of the State of Nevada, or (b) any person who has been an employee of an agency of the State of Nevada within the past two (2) years, and if such person will be performing or producing the services which you will be contracted to provide under this contract, you must disclose the identity of each such person in your response to this RFP, and specify the services that each person will be expected to perform.

4.1.7. Disclosure of any significant prior or ongoing contract failures, contract breaches, civil or criminal litigation in which the vendor has been alleged to be liable or held liable in a matter involving a contract with the State of Nevada or any other governmental entity. Any pending claim or litigation occurring within the past six (6) years which may

adversely affect the vendor's ability to perform or fulfill its obligations if a contract is awarded as a result of this RFP must also be disclosed.

Does any of the above apply to your company?

Yes	See below	No	See below

Omnicell is a public company and as such is subject to SEC disclosure regulations. Please refer to item 3. Legal Proceedings within our Annual Report which can be found on our corporate website at http://ir.omnicell.com/.

If "Yes", please provide the following information. Table can be duplicated for each issue being identified.

Question	Response	
Date of alleged contract failure or breach:		
Parties involved:		
Description of the contract failure, contract breach, or litigation, including the products or services involved:		
Amount in controversy:		
Resolution or current status of the dispute:		
If the matter has resulted in a court case:	Court	Case Number
Status of the litigation:		

4.1.8. Vendors must review the insurance requirements specified in ***Attachment E, Insurance Schedule for RFP 3249.*** Does your organization currently have or will your organization be able to provide the insurance requirements as specified in ***Attachment E.***

Yes	X	No	

Omnicell has included a copy of our Certificate of Insurance within the attachments.

Any exceptions and/or assumptions to the insurance requirements ***must*** be identified on ***Attachment B, Technical Proposal Certification of Compliance with Terms and Conditions of RFP.*** Exceptions and/or assumptions will be taken into consideration as part of the evaluation process; however, vendors must be specific. If vendors do not specify any exceptions and/or assumptions at time of proposal submission, the State will not consider any additional exceptions and/or assumptions during negotiations.

Upon contract award, the successful vendor ***must*** provide the Certificate of Insurance identifying the coverages as specified in ***Attachment E, Insurance Schedule for RFP 3249.***

4.1.9. Company background/history and why vendor is qualified to provide the services described in this RFP. Limit response to no more than five (5) pages.

Omnicell is recognized as a leading provider of comprehensive, technologically advanced automation that enables health care facilities to acquire, manage, dispense, and deliver medications and supplies more effectively. Omnicell automation is used from the point of entry into the hospital through the central pharmacy, nursing units, operating room, procedural areas, and patient bedsides – as well as in long-term care sites.

Omnicell Mission Statement:
"Empower clinicians with solutions for safe medication and supply management"

In January, Omnicell completed acquisition of Aesynt. This combination of two market leading companies provides our customers with an unprecedented choice of technology. The addition of Aesynt to the Omnicell family adds distinct capabilities in central pharmacy robotics, IV robotics, automated dispensing systems, and analytics.

For over 20 years the mission of Omnicell has focused on improving the medication and supply distribution process. Approximately 4,000 hospital customers worldwide have used Omnicell's medication automation, supply chain, and analytics solutions to improve efficiency, reduce errors, and lower costs.

Omnicell non-acute care solutions, including the MTS brand, enable over 6,000 institutional and retail pharmacies worldwide to optimize productivity and control costs. Moreover, the innovative medication adherence packaging solutions can reduce costly hospital readmissions.

At Omnicell, delivering our technology is just the beginning. We are also committed to delivering the best customer experience. To ensure our customers gain the most utility from their Omnicell systems, we offer a suite of analytics software, a comprehensive training and education program, and highly rated customer support.

COMPANY FACTS (FISCAL 2015)

Revenue	$484.6 million
R&D expenses	$35.2 million
History	Founded by current CEO in 1992
Publicly Traded	NASDAQ: OMCL
Headquarters	Mountain View, California
Number of employees	2,200
Global reach	Business operations in 20 countrie
Customers	More than 10,000 healthcare facilit and pharmacies

Location	Mfg	R&D	Service	Sales & Training
California	x	x		x
Florida	x	x		
Tennessee		x		
Illinois			x	
Pennsylvania	x	x	x	x
Germany	x	x	x	x
Italy	x	x	x	x
UK, France, UAE, China			x	x

KEY PRODUCTS:

- Central Pharmacy— Omnicell® central pharmacy systems—including robotic systems, medication carousels and packagers, and inventory management software—help automate the ordering, receiving, stocking, and picking processes. These technologies save time while improving accuracy. *(WorkflowRx and Carousel: Best in KLAS Category Leader 2010-2013; Medication Packager: Best in KLAS Category Leader 2013)*

- IV Compounding— Omnicell offers a complete suite of robotic and semi-automated solutions for sterile compounding, to address risks and costs associated with IV compounding.

- Medication Management— Omnicell automated dispensing cabinets (ADCs) are the clinician-preferred choice due to their ease of use and technological innovations that improve workflow and medication safety. *(Best in KLAS 2006-2015)*
  - SinglePointe™ patient medication management software—the only solution for managing up to 100% of a patient's medications within the automated dispensing cabinet.
  - Anywhere RN™ remote medication management—allows nurses to request medications remotely and have them queued and ready at the cabinet.
  - Savvy mobile medication system—provides safe and secure transportation of medications from the automated dispensing cabinet to the patient's bedside.
  - Anesthesia Workstation™—keeps anesthesia supplies and medications securely stored, yet easy to access during surgery. *(Best in KLAS Category Leader 2011, 2014 and 2015)*
  - OmniLinkRx™ order management system—automates communication between nursing and pharmacy, improving efficiency for both departments and promoting patient safety. *(Best in KLAS Category Leader 2009, 2010, 2011)*

- Supply Management— Omnicell automated supply management systems empower hospital supply chain management to effectively control inventory costs, accurately capture charges for reimbursement, and improve the reorder process.
  - *Omnicell automated supply dispensing systems*—from high-security closed-cabinet systems to open-shelf and combination units, these systems control inventory costs and increase charge capture.
  - *OptiFlex™ supply chain management systems*—automate the replenishment process for supplies in medical-surgical, surgical, and procedural units.
  - *Tissue Tracking software*—combines with bar code scanning to reduce time spent on manual tracking and improve safety for bone and tissue implant recipients.

- Business Analytics— Advanced analytics provide visibility and insights in the areas of drug diversion detection and enterprise inventory management.

- Medication Adherence Packaging— Omnicell offers a range of medication adherence and other packaging solutions for pharmacy and consumers to help reduce administration errors and increase compliance with prescribed therapy.

- Modular Robotic Dispensing Solutions— Omnicell robotic dispensing solutions automate handling of medications in original manufacturers' packages for international pharmacies, leading to reductions in cost and defect levels and increases in output.

OMNICELL PRODUCT ADVANTAGES

Omnicell has significant advantages over competitive solutions including:

- Omnicell® Automated Dispensing Cabinets
  - Patient medication delivery time reduced from 2 hours to 18 minutes
  - Missing medications fell from 17 to 2.5 per day
  - Out-of-stock medications fell from 22 to 3.25 per day

- OmniDispenser™ Single-Dose Dispensing Module
  - Virtually eliminates time-consuming countbacks while ensuring security
  - Based on 5,000 doses issued per day, saves over 8 hours of time spent on countbacks

- Anywhere RN™ Remote Medication Management Software
  - Automated dispensing cabinet medication removal time decreased 33%.
  - 63% of nurses reported that medication administration efficiency increased.
  - 54% of nurses reported reduced interruptions in the medication administration process.

- Integrated Medication Label Printer

  Enables more items such as IV antibiotics to be distributed via the ADC:
  - Costs 8 times less to distribute via ADC than via pharmacy6
  - Saves significant pharmacy time, reduces waste associated with changed medication orders, and speeds time to first dose, helping to prevent delays in therapy
  - 6 Omnicell white paper based on five-hospital study, 2013.

- SinglePointe™ Patient Medication Management Software
  - Restock time decreased 50% (over bin load/unload process)
  - Missing doses decreased 30%
  - Returns/credits decreased 80%

- Controlled Substance Manager
  - 50% less time spent returning items to stock
  - Up to 83% time saved preparing distributor orders
  - Up to 90% time saved preparing CSOS orders

- Pandora® Analytics
  - Supports diversion prevention, regulatory compliance, and inventory optimization systems
  - Saves pharmacy about 1 ½ hours per day spent on reports

- Anesthesia Workstation™
  - Unaccounted floor stock dropped from an average of $5,000 a month to $115—a nearly 98% increase in charge capture
  - Joint Commission review time was cut by 50%

4.1.10. Length of time vendor has been providing services described in this RFP to the public and/or private sector. Please provide a brief description.
For over 20 years the mission of Omnicell has focused on improving the medication and supply distribution process. More than 3,000 acute care customers worldwide have used Omnicell's medication automation, supply chain, and analytics solutions to improve efficiency, reduce errors, and lower costs.

4.2. SUBCONTRACTOR INFORMATION

4.2.1. Does this proposal include the use of subcontractors?

Yes		No	X

If "Yes", vendor must:

4.2.1.1. Identify specific subcontractors and the specific requirements of this RFP for which each proposed subcontractor will perform services.
N/A

4.2.1.2. If any tasks are to be completed by subcontractor(s), vendors must:

Describe the relevant contractual arrangements; N/A

Describe how the work of any subcontractor(s) will be supervised, channels of communication will be maintained and compliance with contract terms assured; and N/A

4.2.1.2.1. Describe your previous experience with subcontractor(s).

4.2.1.3. Vendors must describe the methodology, processes and tools utilized for:

Selecting and qualifying appropriate subcontractors for the project/contract; N/A

Ensuring subcontractor compliance with the overall performance objectives for the project; N/A

Ensuring that subcontractor deliverables meet the quality objectives of the project/contract; and N/A

Providing proof of payment to any subcontractor(s) used for this project/contract, if requested by the State. Proposal should include a plan by which, at the State's request, the State will be notified of such payments.
N/A

4.2.1.4. Provide the same information for any proposed subcontractors as requested in ***Section 4.1, Vendor Information***.

4.2.1.5. Business references as specified in Section 4.3, Business References must be provided for any proposed subcontractors.

N/A

4.2.1.6. Vendor shall not allow any subcontractor to commence work until all insurance required of the subcontractor is provided to the vendor.

N/A

4.2.1.7. Vendor must notify the using agency of the intended use of any subcontractors not identified within their original proposal and provide the information originally requested in the RFP in Section 4.2, Subcontractor Information. The vendor must receive agency approval prior to subcontractor commencing work.

N/A

TAB VIII

ATTACHMENT G – PROPOSED STAFF RESUME

A resume must be completed for all proposed prime contractor staff and proposed subcontractor staff using the State format.

Omnicell employees go through rigorous training, and must be certified, prior to executing customer deployments. Omnicell employees have an average of three (3) years Omnicell experience and ten (10) years Healthcare experience. Omnicell employees include: pharmacists, nurses, and material managers. Omnicell will be happy to furnish resumes of team member upon award of bid. Omnicell employees complete training once a year upon expiration.

TAB IX

OTHER INFORMATIONAL MATERIAL

REFERENCED MATERIALS

All referenced informational materials can be found in the Attachments sections of this proposal.

OMNICELL SOLUTIONS

Advanced Technology

Issue: Hospital's tasked with buying and implementing advanced medication distribution systems must choose a vendor that not only provides the latest technology, but a clear understanding of current and future industry needs.

Solution: Omnicell is a recognized leader in providing state-of-the-art and forward thinking solutions. Based in Silicon Valley, Omnicell has strategic relationships with our technology partners such as Intel and Dell, and has been awarded the tenth year in a row a "Best in KLAS" award. Further details are listed below:

Advanced Server Capabilities

Omnicell Servers enable caregivers to spend less time on administrative tasks through time-saving techniques that include automatically scheduled reports, e-mailed reports and alerts. Our Server with SQL Database will store a minimum seven (7) years of live data, readily available to you via our OmniCenter Remote Access Software – no clumsy disks, tapes or time consuming archiving necessary. The system's information management tools provide compliance and accountability for The Joint Commission standards and regulations.

Omnicell makes every effort to minimize disruption to our customers by becoming a leader in developing modular solutions with upgrade options. Omnicell offers a migration path providing complete technical compatibility (both backward and forward) from one generation of our solution to the next. This results in our customer's ability to leverage their initial investment in Omnicell equipment over an extended period of time (often as long as twelve to fifteen years), while staying up to date on current generation capabilities.

Operating Systems

- Server- Windows 2012
- Cabinet- Windows 7 Platform

Awards

Omnicell has consistently ranked highest among the vendors in our category, and our automated medication dispensing cabinets have earned the top ranking for 10 years in a row.

Because KLAS rankings are based on direct feedback from health care providers, Omnicell is especially honored by these awards. We take the ongoing KLAS data we receive throughout the year to heart—whether positive or negative—because it inspires us to do even better for our customers.

Best in KLAS Awards include:

#1 OVERALL PHARMACY AUTOMATION EQUIPMENT VENDOR: 2013, 2014 and 2015
BEST IN KLAS

- Automated Medication Dispensing Units: 2010 – 2015

KLAS CATEGORY LEADER:

- Automated Medication Dispensing Units: 2006 – 2011
- Anesthesia Cabinets: 2011, 2014 and 2015
- Controlled Substance Manager: 2013 – 2014
- High Volume Unit Dose Packaging: 2013 – 2014
- Medication Carousels: 2010 – 2015

The 2015 KLAS report provides detail about how each vendor performed against other vendors in the Pharmacy Automated Equipment Segment. Omnicell products were rated well above average or above average in every segment.

1. Omnicell 84.3 **2. CareFusion 79.4** **3. Aesynt 76.8** **4. ARxIUM 76.2**

HOW THE VENDORS PERFORM AGAINST ALL OTHER PHARMACY AUTOMATION EQUIPMENT VENDORS

RANK	1 Omnicell	2 CareFusion	3 Aesynt	4 ARxIUM
Sales & Contracting	Above Average	Average	Below Average	Average
Implementation & Training	Above Average	Average	Average	Average
Functionality & Upgrades	Above Average	Average	Average	Average
Service & Support	Above Average	Average	Average	Average
Overall Satisfaction	Average	Average	Average	Average
Would You Buy Again	Above Average	Average	Below Average	Average
Recommend to Peer/Friend	Above Average	Average	Average	Average

HOW THE VENDORS PERFORM IN THE SEGMENTS LISTED BELOW

RANK	1 Omnicell	2 CareFusion	3 Aesynt	4 ARxIUM
Automated Medication Dispensing Units	Well Above Average	Average	Average	Below Average
Anesthesia Cabinets	Above Average	Average	Well Below Average	
Pharmacy Automation: High-Volume Unit Dose Packaging	Average		Average	Above Average
Pharmacy Automation: Medication Carousels	Well Above Average	Above Average	Average	Well Below Average
Pharmacy Automation: Robots (Oral Solid)			[1] Average / Average [2]	

1. Aesynt PROmanager-Rx
2. Aesynt ROBOT-Rx

Well Above Average · Above Average · Average · Below Average · Well Below Average

State and Federal Regulatory Compliance

Omnicell products and solutions adhere to all ISMP and Joint Commission Guidelines.

Advanced Reporting Capabilities

- Automated Schedule Reporting – The Omnicell System includes over 100 standard reports that can be scheduled and emailed automatically as well as exported to Excel for data customization. With permissions, users can generate, create and schedule these reports remotely via our Omnicell Remote Access (OCRA) from any computer that can run Microsoft Terminal Services Client, giving greater flexibility to users.
- Custom Reports – A custom report writer is included for fine tuning data elements to a user's preference. The report writer allows the easy creation of custom reports with no knowledge of SQL required. Omnicell also provides a Custom Reports Library of reports created by Omnicell users, and shared within our Customer's Only Extranet site.
- PandoraVIA – This optional Web-based software service provides medication analytics to enhance diversion detection and clinical benchmarking. PandoraVIA allows hospital staff and pharmacists to:
  - Create reports with custom views of dispensing activity to answer specific questions related to inventory optimization, drug diversion, patient safety, and more.
  - Identify areas with regard to dispensing activity where there is inefficiency, room for improvement, and/or correction.
  - Answer questions related to users' dispensing activity within the hospital(s).

Cartless Model

Issue: The daily demands of distributive activity make it difficult for pharmacy to take on more clinical activity such as discharge counseling and medication reconciliation, which promote improved outcomes and readmissions as well as cost reduction.

Hospitals using a centralized or hybrid (cartless and cartfill) model of medication distribution may not realize all the costs involved.

Dispensing costs — Did you know that dispensing batch doses from the pharmacy can take up to 2 ½ times more labor than dispensing doses from the automated dispensing cabinet (ADC)?

Missing doses associated with cartfill distribution creates wasteful activity for pharmacy and nurses.

Delay in first doses — In addition to waiting for pharmacy to fill orders, nurses often have to look for meds in two or three different locations. Studies have shown adverse effects when the administration of antibiotics is delayed.

Medication error risk — Because cartfill medications are not managed as tightly as cartless meds, nurses are more likely to make medication errors related to discontinued medication orders, managing patients' own meds, and transfer of medications as patients move throughout the hospital.

Solution: Increasing cartless distribution can save time and improve patient outcomes. The more medications dispensed via the ADC, the greater the benefits. Omnicell provides solutions that will help to reduce dose delays and missing medications while freeing up more time for clinical activities.

Omnicell offers unique innovations in our medication dispensing system specifically designed to expand the benefits of the cartless experience.

SinglePointe™ patient medication management software

- Enables virtually all of a patient's medications to be managed within the ADC
  - Assures medications are profiled

- Helps greatly reduce missing doses and other medication errors, particularly related to patient transfers

Anywhere RN™ remote medication management software

- Allows nurses to queue up medications away from the cabinet
- Saves time and creates safer medication workflow

Medication Label Printer

- Makes it feasible to store more types of medications within the ADC, such as nurse-prepared antibiotics
- Reduces costs and prevents delays in therapy waiting for pharmacy to provide patient-labeled medications

Clinical Interoperability

Omnicell's interoperable, standards-based systems effectively complement other vendor solutions in the hospital inpatient setting. Our systems are able to share clinical information between disparate systems to eliminate redundant data entry and enhance reporting capabilities. This ability also enhances drug accountability, patient safety, efficiency within the healthcare facility. The explanation below illustrates Omnicell's clinical interoperability with other vendors.

- OmniRx and Gold Standard Multimedia- Allows nurse to receive online, real-time drug information and patient education information from within ADC drug profile
- HIS/PIS HL7 Multi-Component Drug Order Handling- ADC profile screen displays component items for pharmacy prepared (IV Admixtures) and nursing prepared multi- component orders and facilitates appropriate dispensing
- Medication Order Centricity between HIS/PIS- Order display on patient's drug profile exactly matches display on Nursing eMAR- *single source of truth across platforms*
- Closed Loop Medication Dose Accountability- PandoraVIA can match ADC dispense data with eMAR/ BPOC administration data and create variance reports
- ADC Reporting Analytics- PandoraVIA is ADC independent, allowing for sophisticated reporting (e.g., diversion detection, inventory optimization) regardless of ADC vendor

Interoperability with EPIC

Omnicell guarantees peace of mind for customers looking to interface their Omnicell and EPIC solutions. Omnicell has dedicated engineers from our research and development department, that have developed standardized interface specifications with EPIC, to insure that new product releases by either vendor will be tested prior to implementation at a customer site.

- Omnicell also keeps a test cabinet at EPIC headquarters in Verona, Wisconsin to facilitate testing of interfaces as each company releases new versions of their software.
- Omnicell has the capability of appropriately managing and displaying multi-component medication orders that are dispensed at the cabinet (e.g., a combination trade name product like Lopressor HCT 100-25; Metoprolol 100mg, hydrochlorothiazide 25mg or an order for Prednisone 8mg) and for multi-component IV admixtures.
- Display of the medication order detail on the cabinet profile will be equivalent to the display on the EPIC eMAR, thus giving the nurse a consistent display of information regardless of which vendor's system they are working with.
- In addition to the standard OmniCenter interfaces, the Omnicell R&D team has created interfaces to EPIC that support Omnicell's State-of-the Art, supply chain management OptiFlex solutions including OptiFlex for Cath Lab, Medical Surgical Supplies and Surgical Services.

Cost of Ownership

Issue: Forced technology replacement is a hassle and expensive.
Some competitive business models often require either full equipment upgrades or replacement in order to stay current with software versions and operating systems. Most current competitive hardware and /or software releases are typically not compatible with prior versions. This leads to a significant increase in total cost of ownership over an extended period of time.

The Omnicell Difference

As one of our customers put it: *"Even though we had Pyxis for 7 or 8 years, there was never going to be any drop off in cost. What it amounts to is that you continually have to buy new hardware in order to get the software upgrades. Over a 10-year period of use, I projected for our board that Omnicell would probably cost 30% to 40% less (than Pyxis investment). That seemed to be a tremendous advantage."*

Additional Features

- Software Upgrades every 12 to 18 months – Omnicell typically provides new software releases approximately every 12 to 18 months. These releases are included as part of a current service agreement. Omnicell uses these upgrades to incorporate regulatory mandates or guidelines from ISMP, DEA, Leapfrog, the Joint Commission (TJC), CMS and even sentinel events that reach the media.

- Backward and Forward Compatibility - Most importantly, Omnicell provides complete technical compatibility (both backward and forward) from one generation of our solution to the next. This provides DPBH the ability to leverage your initial investment in Omnicell equipment over an extended period of time, often exceeding 10 years as experienced by a vast majority of our customers.

- Service / Business Model: We design our products to last longer. There are fewer moving parts to break and we engineer our products in modular design for serviceability and easy upgrades. The service agreement contractually commits that all Omnicell hardware is covered under a "fix or replace" guarantee for the life of the service agreement The value to DPBH is that as long as you use our products and service, we will keep your product working to specification and with our latest version of software that you choose to install. Keeping your products fresh and up to date is one reason why our customers stay with Omnicell.

The image below illustrates Omnicell technology migration path:

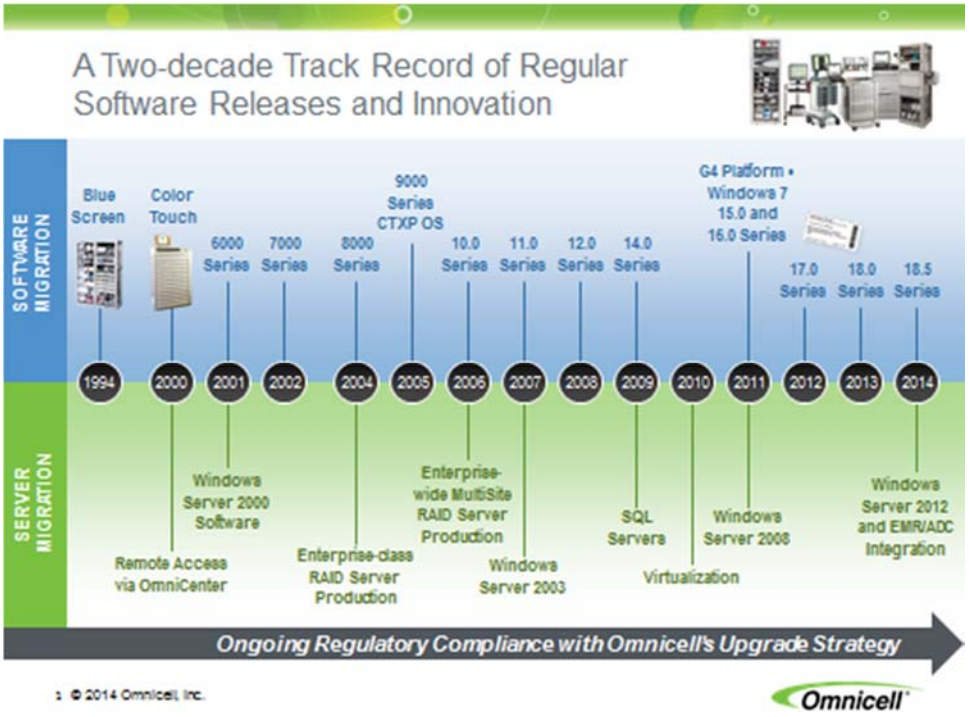

Customized Flexibility of Configurations

Issue: Choosing a vendor that will customize a solution to fit your needs.

Solution: Omnicell's solutions are built to fit your needs and have the ability to allow for growth in the future.

- Flexible Modular Design: Rather than providing a one size fits all approach that other vendors utilize, Omnicell offers a Pharmacist based consultative approach where we learn about your current and future needs and assist you in creating safe and effective medication delivery systems. Automated pharmacy management systems are available in a modular design which allows cabinets to be configured to meet the unique needs of each clinical area. High and low security areas of different sizes with unit dose, single dose, locking, matrix or guiding bins, accommodate every medication handling need.
- Customized configurations: Omnicell manufactures and sells a variety of medication dispensing drawers. Omnicell has a unique modular design which offers our customers the flexibility to configure drawers and cabinet sizes for each and every location in their facility, based on the number of meds that need to be stocked in each unit. Our customers have the flexibility to buy any combination of these drawers as individual units. Omnicell offers drawer solutions which have 4 individual bins, 6 individual bins, 12 individual bins, 24 individual bins, and 96 individual bins. These drawers come in different security levels and depths.
- Only purchase what you need: With the previously stated flexibility and customization options, Omnicell has the unique ability to incorporate its medication drawers into medication towers ("cells"). By offering this modular design Omnicell customers can minimize their capital costs by only buying exactly what each nursing station needs with the ability to provide future storage growth at a very small fractional cost. The cost differential between adding one or two drawers into a unit versus adding an entire auxiliary cabinet can be substantial over the term of an agreement. For example, Omnicell systems can be configured to

mirror our competitors with an OmniRx, OmniAux, and Aux Tower (see images below for Omnicell and the competitor's cabinet design).

Omnicell	Competitor	Competitor

As previously mentioned, Omnicell provides medication storage systems that can mirror our competitors configuration. However, due to the gains in the storage capacity of our taller cabinets, most of our customers select the "cell" design which is **only offered by Omnicell**. These cabinets help maximize the foot print and enable users to increase capacity with drawers and shelves. This configuration has more capacity than the traditional main, aux and tower set up displayed above and actually only takes up two "footprints" of a nursing station as shown below. The following illustrates how we provide **greater storage capacity** in a smaller footprint, at no additional cost:

Omnicell

Two-cell

Other

Tower Main Aux 7-drawer

Each one two and three cell cabinet can be configured during the consultation to hold a maximum of 18 pharmacy Drawers per tower. For example:

- A One Cell could be configured to hold up to 18 Rx Drawers and have space above the computer for two shelves in an approx. 22.7" W x 77.5" H x 24.5" D footprint.
- A Two cell could be configured to hold up to 36 Rx Drawers with 7 shelves in an approx. 52" W x 77.5" H x 24.5" D footprint.
- A Three Cell could be configured to hold up to 54 Rx Drawers with up to 12 shelves in an approx. 76.5" W x 77.5" H x 24.5" D footprint.

Again, this cabinet design is a Main, Aux and Tower all in one, allowing stocking of medications, medical supplies and general supplies in the same cabinet. Zone access can be set up so that materials management

(or respiratory therapy) can only access their zone for restocking, while the nurse is able to quickly remove all of the needed meds and supplies at one time (with no preselect needed on the supplies).

Diversion Prevention and Security for High Risk Medications

Issue: Keeping narcotics securely stored and preventing drug diversion can be challenging, yet it's critical for protecting patient safety—and hospital liability. A hospital was fined $2 million for diversion-related issues, including failure to provide proper recordkeeping (U.S. Drug Enforcement Administration press release, July 26, 2007).

Solution: Omnicell offers solutions to keep narcotics secure and prevent potential drug diversion. From tamper resistant drawers to Business Analytics, Omnicell has a solution to meet your security needs.

- Tamper Resistant- tamper-proof metal lids of each bin further ensure security. In addition, a software option requiring a quantity count can be activated on a location specific, item-by-item basis.
- Omnicell's commitment to diversion monitoring and tracking occurs through the use of the OmniCenter standard reports monitoring for numerous potential diversion scenarios.
- Automatic alerts to suspicious activity can be provided to you daily.
- PandoraVIA allows hospital staff and pharmacists to create reports with custom views of dispensing activity to answer specific questions related to inventory optimization, drug diversion and much more. PandoraVIA also allows users to identify areas with regard to dispensing activity where there is inefficiency, room for improvement and/or correction.
- The Controlled Substance Manager (CSM) solution is a controlled substance barcode inventory management system. The CSM software, coupled with our automated dispensing technology, enables healthcare facilities to track, monitor and control the movement of controlled substances from the point of initial receipt from the wholesaler throughout internal distribution. The CSM solution maintains a perpetual item inventory and complete audit using integrated barcode technology with both fixed and portable scanners. Bar coded forms and labels may also be generated directly from the CSM system.

An Expected Return on Investment

Issue: Hospitals are facing decreased profit margins, while regulations and patient expectations are at an all-time high. Due to this, any new investment must meet stringent ROI in patient safety and time spent on patient care.

Solution: Omnicell's solutions provide caregivers the ability to spend more time on patient care with our with advanced software tools, allowing a more efficient workflow within the medication-use process.

Omnicell Medication Systems provide healthcare facilities with advanced, flexible systems for the management of medications in the central pharmacy and nursing unit, helping users ensure patient safety, monitor and control medication dispensing, comply with The Joint Commission and regulatory standards, improve clinical decision-making, and ultimately improve patient care. Our system will deliver immediate cost savings in decreased consumption, reduced inventory, increased productivity, and enhanced patient safety. In addition, our centralized database architecture and network connectivity will give you consolidated reporting capabilities across all products and medications from multiple locations in your facilities. This will provide you with all required information needed to comply with regulatory requirements and manage the medication administration process.

The breadth, scope, and flexibility of the OmniCenter server's reporting capabilities continue to bolster the efficiency and effectiveness of the Omnicell System. The Omnicell System generates reports for productivity analysis. Discrepancy and various transaction reports enable nurse, pharmacy and material managers to monitor staff productivity and compliance for performance improvement initiatives. The system features many predefined reports that enable users to extract information from the database in detail or summary form. Users can also create custom reports to meet unique reporting requirements. The benefits of such reporting capabilities include improved cost accounting, better productivity and compliance, and optimized distribution of supplies and medications.

Specific Benefits from those products being proposed are summarized here:

- Hospitals using SinglePointe report an 82% reduction in medication returns and credits and a 55% reduction in time spent restocking medications at the ADC.
- South Jersey Hospitals recognized 33% decrease in time to remove drugs from automated dispensing cabinets utilizing Anywhere RN.
- Hospitals using the Anesthesia Workstation and OptiFlex supply solution report charge capture increased by to 90%.

Interface Capabilities

Omnicell interface services utilize HL7 to exchange information with the different hospital systems. It is also capable of utilizing several other communication formats.

HL7 Interface Standards

Omnicell recognizes the essential role that system integration and interfaces play in coordinating all data, management ability and financial reporting for today's healthcare provider. Omnicell is a corporate member of the HL7 organization and fully supports its interface standards. Omnicell has written over 7000 active interfaces to various systems, including interfaces according to other vendors' proprietary interface formats and communication protocols needed. Our systems are designed to easily work and exchange data with existing facility information systems as well as the drug wholesalers. When the system has been installed, all interfaces and the integrated database will provide a seamless, consistent system that is easy to use.

Meaningful Use (EHR Certification)

Issue: One of the steps required for hospitals to be qualified for meaningful use incentives is that they work with certified EHR vendors.

Solution: Omnicell's new G4 (fourth-generation) automated medication dispensing platform has received ONC-ATCB certification as a Modular Electronic Health Record (EHR) allowing us to help our customers in achieving their meaningful use objectives.

Omnicell recognizes the importance of Meaningful Use to hospitals. While Omnicell is not an EHR vendor, there are certain requirements that we may meet that would be beneficial to our customers. Omnicell is the only company that offers an automated dispensing system that is Modular EHR-certified and works with all HIS vendors. Our certification provides assurance that our dispensing system meets security and privacy criteria as an EHR Modular technology. With Omnicell Attestation support, customers can qualify for financial incentives offered through the EHR Incentive Program from the Centers for Medicare & Medicaid Services (CMS). We have consistently been EHR Modular certified since 2011, and continue to do so, providing customers the eligibility to receive maximum financial incentives

Mobile Medication Solutions: Patient Specific Bedside Medication Management

Issue: ISMP Core Process # 10 recommends that hospitals "Standardize processes for transporting medications from the ADC to the patient's bedside" to reduce the risk of medication errors and to safely and securely transport medications to the patient's bedside.

Solution: The Omnicell Savvy™ mobile medication system (mobile cart) streamlines the medication administration process and provides safe and secure transportation of medications from the automated dispensing cabinet (ADC) to the patient's bedside. Savvy seamlessly integrates the Omnicell ADC, mobile carts, and bedside point-of-care (BPOC) systems during the drug distribution process, reducing probability for medication errors and increasing workflow efficiencies. Savvy features individually locking patient specific drawers as well as the Anywhere RN software to reduce nurse's time at the ADC.

Omnicell Product Advantages

Issue: The decision to deploy any type of technology, including pharmacy and supply chain automation technology, is complex and has multiple criteria that should be considered to determine the value that a particular technology application will generate to the user. How well a vendor responds to each of these criteria can also be used to benchmark the performance of one solution versus another, as well as the capabilities and performance of one vendor versus another.

Solution: The following is a summary of Omnicell's solutions that address and resolve common customer issues and also demonstrate why we believe that Omnicell has significant advantages over competitive solutions.

- Omnicell® Automated Dispensing Cabinets
  - Patient medication delivery time reduced from 2 hours to 18 minutes
  - Missing medications fell from 17 to 2.5 per day
  - Out-of-stock medications fell from 22 to 3.25 per day
- OmniDispenser™ Single-Dose Dispensing Module
  - Virtually eliminates time-consuming countbacks while ensuring security
  - Based on 5,000 doses issued per day, saves over 8 hours of time spent on countbacks
- Anywhere RN™ Remote Medication Management Software
  - Automated dispensing cabinet medication removal time decreased 33%.
  - 63% of nurses reported that medication administration efficiency increased.
  - 54% of nurses reported reduced interruptions in the medication administration process.
- Integrated Medication Label Printer

  Enables more items such as IV antibiotics to be distributed via the ADC:
  - Costs 8 times less to distribute via ADC than via pharmacy

  - Saves significant pharmacy time, reduces waste associated with changed medication orders, and speeds time to first dose, helping to prevent delays in therapy
  - Omnicell white paper based on five-hospital study (2013)

- SinglePointe™ Patient Medication Management Software
  - Restock time decreased 50% (over bin load/unload process)
  - Missing doses decreased 30%
  - Returns/credits decreased 80%

- Controlled Substance Manager
  - 50% less time spent returning items to stock
  - Up to 83% time saved preparing distributor orders
  - Up to 90% time saved preparing CSOS orders

- Business Analytics
  - Supports diversion prevention, regulatory compliance, and inventory optimization systems
  - Saves pharmacy about 1 ½ hours per day spent on reports

- Anesthesia Workstation™
  - Unaccounted floor stock dropped from an average of $5,000 a month to $115—a nearly 98% increase in charge capture
  - Joint Commission review time was cut by 50%

Eliminate paper management and manual process of order entry time for medication orders.

Issue: Lost, misplaced, and delayed medication orders result in significant rework, unnecessary phone calls, and frustration. The end result is often delayed patient therapy.

Solution: OmniLinkRx automates communication of medication orders and related information between nursing and pharmacy, improving efficiency and productivity for both departments.

OmniLinkRx™ offers an advanced patient safety solution for the management of handwritten physician orders, simplifying the communication of orders from remote nursing stations to the pharmacy. The system is a software-only solution that automates communication between nursing and pharmacy, improving efficiency and productivity for both of those departments.

OmniLinkRx incorporates the latest technology capabilities, advanced viewing features, and a host of other benefits including:

- Audit tracking of every user's access of each order and all annotations made to each document (HIPAA).
- Pre-defined and customer created stamps that can easily be applied to any documents.
- Enlargement capabilities for enhanced viewing of document information to aid in legibility.
- Ability to e-mail/print documents to other users and non-users for clarification and/or quality assurance purposes.

- Integrates with Omnicell Cabinets: Override messages and answers to Dispensing Alerts from high risk medications can be sent from Omnicell cabinets to OmniLinkRx where they are available real time to aid in appropriate monitoring and patient safety.
- Provides coverage for non-24hour pharmacies.

Patient Safety

Issue: Preventable medication errors cost $21 billion annually (National Quality Forum and National Priorities Partnership, December 2010).

Interruptions occur in over half of drug administrations, and each interruption can result in over a 12% increase in clinical errors (Archives of Internal Medicine. April 26, 2010).

Unlabeled syringes are surprisingly common despite the Joint Commission's Medication Management Standards, which call for all drugs to be labeled.

Solution: Omnicell offers many innovations that reduce the potential for medication errors and create a safer environment for patients.

- Guiding Lights: This feature provides visual guidance to a nurse, clinician, or pharmacy technician during the dispense, restock, waste and return process, significantly reducing the potential for medication errors associated with look-alike and sound-alike medications. In the case of an interrupted restock process, guiding lights will guide the clinician back to the point where the restock was interrupted without having to restart the entire process.
- Sensing Lid Technology: Replaces the "open" matrix or "free for all" storage of early years, and provides visual lights, audible tones and audit trails for the floor stock medications in the system.
- Allergy Alerts: When medications must be administered prior to review by pharmacist (non-profiled), this feature performs a safety check for allergies automatically and notifies the clinician of the potential allergy. It continues to function even if a drug is being removed from the cabinet in an emergency and has not been verified by pharmacy.
- SafetyStock Barcode Scanning: Provides additional barcode scanning safety checks on drugs during the dispense, return, and restock processes. SafetyStock is configurable by drug or by cabinet, and provides an additional safety check via barcode verification and reduces the chance of medication errors due to look-alike and sound-alike drugs.
- Dispensing Alerts: Allows the pharmacy to define and provide dispensing alerts to the clinician at the individual drug level, which provides a third safety check at the point of drug dispense. This further reduces the potential for medication errors and supporting compliance requirements to The Joint Commission and clinical requirements.
- FlexLock with Temp Check: This is a remote locking device for refrigerated meds that also monitors temperature and notifies by pager or email if that temperature falls out of a given range. Temperature data over a time period is saved, recorded, and available for The Joint Commission reporting.
- (Optional feature) SinglePointe™ -Patient Specific Bins: SinglePointe is a patented Omnicell software feature that revolutionizes the way hospital pharmacy and nursing staff store, manage, and track patient-specific medications, creating a closed-loop distribution system that greatly reduces the risk of medication errors and boosts staff efficiency. In a departure from traditional medication dispensing systems, the SinglePointe solution provides an auto-assign process that matches the patient-specific locations with patients and their medications that are not routinely stocked in the cabinets.

Additional Safety Features Include:

- Medication profile access to 100% of patients medications
- Warnings, alerts and witness options for high-risk medications
- Able to restrict medication access to specific users (example respiratory)
- Broadest storage options available to meet both security and safety needs for each medication (drawers – matrix (lit and unlit), sensing, locked and single-dose dispensing; shelf in cabinet, refrigerator (FlexLock) and remote out of cabinet locations)
- Full barcode medication confirmation during the restock, issue and return processes (SafetyStock)
- Omnicell cabinets meet ISMP ADC guidelines and Joint Commission standards

"Two of the advantages of SinglePointe that we've experienced are fewer missing doses and fewer calls to pharmacy due to the nurses' inability to find medications that the pharmacy has already dispensed. It's good for the nurse, it's great for the pharmacist, and it's great for the patient".

-- Alan Knudsen

Director of Pharmacy

Shands HealthCare

Patient Specific Medication Management

Issue: Most automated dispensing cabinets store about 80% of a patient's medication needs. The remaining 20% that don't "fit" within the automated system is handled manually, which time is consuming for nursing and pharmacy staff, and creates more chance for medication errors or missed doses.

Solution: Omnicell's SinglePointe™ software creates a closed-loop distribution system to handle all patients' medication.

Unique to Omnicell, SinglePointe is the only solution for handling up to 100% of a patient's medications within the automated cabinet—bringing benefits to patients, nurses, and pharmacy. In a departure from traditional medication dispensing systems, the SinglePointe solution provides stocking of patient-specific medications in the cabinet, and controlling access to these medications via the patient profile thus providing increased patient safety and efficiency. This avoids common workarounds that cause inefficiencies for the nurse and can lead to medication errors. For pharmacy, SinglePointe provides an auto-assign process that matches the patient-specific locations with patients and their medications that are not routinely stocked in the cabinets.

Clinical Impact of SinglePointe [1]

- Restock time decreased 50%
- Missing doses decreased 30%
- Returns/credits decreased 80%
- Potential medication errors decreased 76%

1Based on Omnicell customer data

Remote Medication Management

Issue: As ADCs have become the cornerstone of many hospitals' medication distribution processes, new challenges have arisen such as: nurse queuing, nurses feeling rushed at the ADC, nurses unable to access the ADC, and nurses must return to the ADC to document waste.

Solution: Omnicell's Anywhere RN software application enables nurses to remotely access an Omnicell automated dispensing cabinet from any hospital computer or workstation. This solution allows nurses to manage their medication administration workflow in a manner that is most efficient for them, thus providing more time for direct patient care.

Anywhere RN- Anywhere RN is a licensed feature allowing users, with privileges, the ability to create requests for medication issues and returns, and document wastes from a remote location. A remote location is a laptop, mobile cart, or workstation connected to a network with access to the OmniCenter server.

South Jersey Hospitals recognized 33% decrease in time to remove drugs from automated dispensing cabinets

- Anywhere RN enables nurses to remotely request scheduled and PRN medications, request return of unused medications, and record medication waste from any hospital computer or workstation.
- After remote requests are generated, the user can go to a cabinet and be prompted to issue or return the medications requested. Users can view the status of any medication issued, wasted, and/ or returned for a patient from the remote location. The user can see what medications are outstanding and need resolution (e.g. returned or wasted).
- These medication management functions can be completed at a time and location that is most convenient for the nurse, increasing nursing efficiency and safety by reducing the interruptions that occur during the medication administration process.

Service and Reliability

Issue: Reliable 24/7 service support with regionally located "in-house" vendor staff to provide on-site assistance with guaranteed response and uptimes.

Solution: Consistently recognized as a top service provider, Omnicell's dedication to providing exceptional customer service in support is at the core of one of our guiding principles, "The Customer Comes First." This is accomplished by consistently and cohesively delivering our "Service Value Proposition"--Uptime, Responsiveness, Ownership and Flexibility. The following briefly out lines our Service Support program:

- In-house Service Staff -- Omnicell has created a national service organization consisting of technical support, field service, and parts logistics teams which are equipped to respond to customer needs and resolve issues with speed and efficacy. State-of-the-art call tracking, field service, and knowledgebase tools allow technical personnel to quickly access key product information, account status and service history. Omnicell technical support engineers are able to effectively resolve most reported problems without having to send a representative on site. In addition, each facility's hospital will be assigned a dedicated primary Technical Service Engineer (TSE) who is responsible for service and customer satisfaction. Each primary TSE is backed up by a secondary and tertiary TSE to maintain service support and response twenty-four (24) hours per day, seven (7) days per week. Each TSE assignment is maintained and monitored using Omnicell's Service Enterprise Software. The primary TSE will act as the first and central point of contact for all on-site support requirements of the hospital.
- Proactive Remote Monitoring -- Omnicell's vSuite product is the latest advancement in service support, utilizing the concept of Proactive Remote Monitoring, allowing systems to automatically identify system anomalies, parameter variances, and emerging trends before they become problematic.
- Customer Satisfaction – Omnicell's goal is to provide the best customer experience in healthcare. To that end, we continuously measure customer satisfaction and solicit feedback on how we can improve. Omnicell uses multiple methods to capture product and service quality as well as customer satisfaction. Weekly, monthly and quarterly metrics look at Mean Time between Failures, Mean Time to Repair, Call loading per engineer and customer call volume. In addition, Omnicell conducts quarterly customer satisfaction surveys which are used to drive process improvement initiatives. Additionally, Omnicell has continually received some of the highest ratings in customer satisfaction among third party surveys like MD Buyline.

- Response time – Phone response time is typically less than one minute during the hours of 6:00 a.m. to 6:00 p.m. Central Standard Time, with a guaranteed response within 30 minutes during those hours. Support is provided from our Chicago area facilities (Waukegan IL). After hours phone response time is typically within 30 minutes, with a guaranteed response within two (2) hours. With a Gold Level Service contract, Omnicell guarantees onsite service response time within six (6) hours.
- Uptime Guarantee – The OmniCenter server utilizes the latest database technology, SQL Server, to reduce annual scheduled downtime to 0.1%. Per the Gold Level Service Agreement proposed we offer a 96% up-time guarantee. Omnicell will commit to a cumulative up-time percentage per unit for Delivered Products as identified on the Support Services Matrix for the applicable level of Support Services purchased by Customer on an applicable Pricing Supplement. Such a cumulative up-time percentage will be measured by Omnicell's Technical Support Desk. An uptime report will be provided from the Technical Support Administrator upon customer's request. In the event that a month passes in which the 96% up time per unit is not maintained, Omnicell will waive the monthly service payments for that particular month, for those units.
- Live Updates – Our preferred access solution is to use the Omnicell remote access solution: vSuite. Omnicell's vSuite product is the latest advancement in service support, utilizing the concept of Proactive Remote Monitoring, allowing systems to automatically identify system anomalies, parameter variances, and emerging trends before they become problematic. vSuite is used for downloading patches, upgrades and other system tuning. vSuite is Internet-based, firewall-friendly and extremely secure.

A Solution unique to the Anesthesia Provider

Issue: There is a greater opportunity for diversion in the OR and procedural areas, yet anesthesia providers have been resistant to adopt technology that keeps medications more secure and meets regulatory requirements. Anesthesia cabinetry is needed that is easy and intuitive, allowing providers to focus on patient care and safety.

Solution: *Omnicell's Anesthesia Specific Solution*

- Omnicell's Anesthesia Workstation is an OR Suite based system for the management of anesthesia supplies and medications that satisfies the unique needs of the Anesthesia provider in the operating room. Powered by Omnicell Color Touch software, the Anesthesia Workstation provides a large, color screen and easy-to-use touch-screen technology which enables nurses and anesthesiologists to access supplies and medications easily and efficiently.
- With greater efficiency in the management of anesthesia supplies and medications, Omnicell's Anesthesia Workstation helps facilities meet regulatory requirements pertaining to medication management, while giving clinicians the convenience and time to focus on patient care.

Omnicell Conversion Experience

Issue: The process of converting from one technology vendor to another doesn't have to be a source of anxiety. As your trusted partner and expert advisor Omnicell will facilitate a smooth transition, giving you peace of mind.

Solution: Omnicell has years of experience working with customers who have chosen to convert their existing technology to Omnicell® medication and supply automation. In fact, every few days we are beginning a new conversion implementation.

Because of the frequency of conversions, Omnicell has developed an established process and will work with you every step of the way to ensure a seamless transition from your current equipment. A dedicated implementation team will spend time with your pharmacy and nursing staff to ensure the system is set up to

meet your goals. The team will work with you to define a mutually agreed upon implementation plan that includes an installation schedule and training timelines.

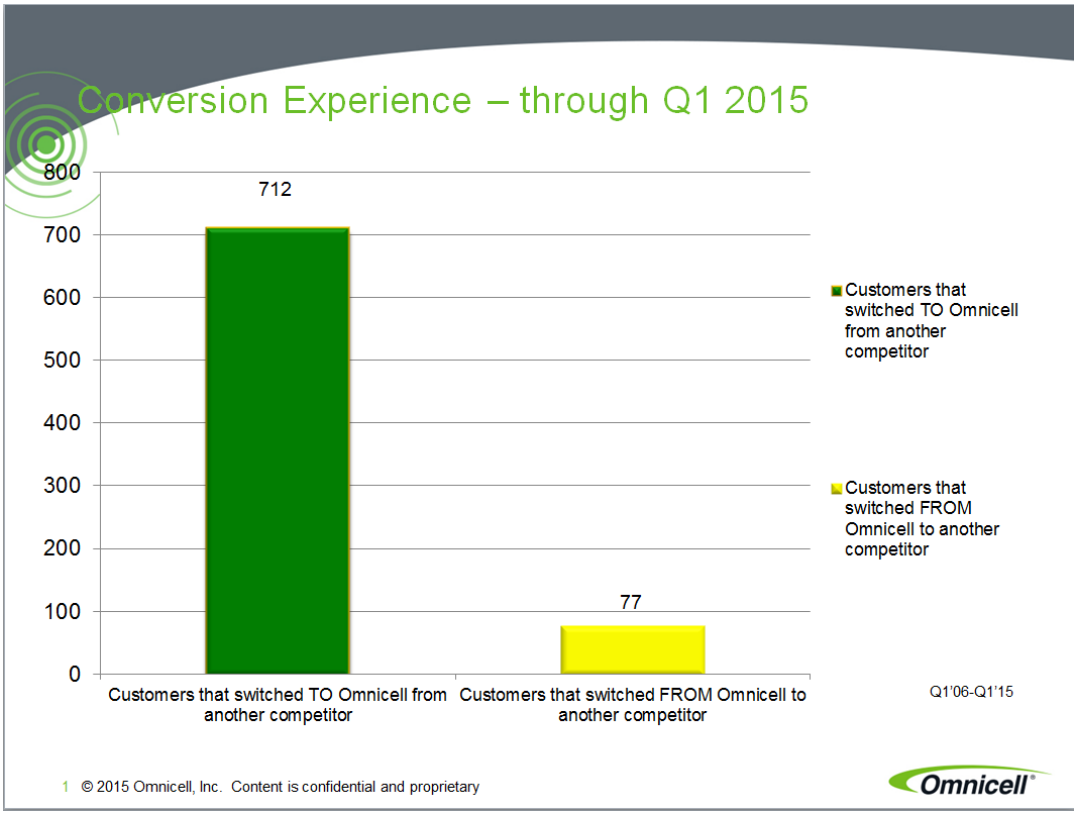

"The conversion to Omnicell exceeded our expectations. It's clear that Omnicell has done this many times before. They know what they are doing, and they do it exceptionally well. The level of professionalism, follow-through, communication, and thoroughness shown has been off the chart and for that I am thankful."

Robert Carta, Assistant Vice President, Division of Pharmacy Services
Carolinas HealthCare System, Charlotte, North Carolina

Workflow Efficiency

Issue: Current medication management workflows could be an obstacle to improving Patient Safety Outcomes, Nurse Retention and Satisfaction and may be contributing to these problems:

- Increased overtime
- Frustration from performing redundant nurse activities
- Lowered staff morale, which impacts nurse retention

Consider how much time certain medication management tasks take:

- Waiting in line at the ADC during busy med passes
- Tedious countbacks of controlled substances
- Handwriting labels or tracking down doses from the pharmacy for items not stocked in the ADC

Solution: Omnicell provides several solutions that can significantly increase the efficiency with which your nursing staff manage medications.

- OmniDispenser™: This single-dose dispensing module eliminates the majority of time-consuming narcotic countbacks, as well as associated discrepancies by delivering one dose at a time.
- Ease of Use: Omnicell's products are consistently ranked number one for superior ease of use, and its intuitive user interfaces drive extremely high compliance along with the associated improvements in workflow efficiency.
- OmniExplorer: Provides the clinician with the ability to search all of the other cabinets within the hospital to locate a medication that is out of stock at clinician's cabinet, significantly reducing time spent on manually searching for required medications.
- Medication Label Printer: Omnicell's Medication Label Printer which is integrated in the ADC enables the nurse to print patient-specific medication labels, eliminating the inconvenience and risk of handwritten labels.
- SinglePointe (Patient Specific Bins): SinglePointe addresses the time-consuming, inconsistent and labor intensive medication management procedures that remain in hospitals today by providing nurses and pharmacists with a single point of access for all patient medications that is simpler and safer. In a departure from traditional medication dispensing systems, the SinglePointe solution provides an auto-assign process that matches the patient-specific locations with patients and their medications that are not routinely stocked in the cabinets. This proprietary feature significantly reduces the labor intensive process of loading and unloading medications in the cabinet as well as the management of multi-use and "home" medications. Whether the patient is transferred or discharged, the SinglePointe solution's user intuitive workflow results in improved control and accountability of these patient-specific Medications.
- Anywhere RN: A revolutionary new approach to how nurses use the Omnicell cabinet. At the center of Anywhere RN is the ability for the nurse to remotely "access" the Omnicell cabinet from any computer or workstation, including mobile carts, in the patient care area. This offers nurses the ability to: Document wastes remotely; Generate issue and return requests remotely; View the patient profile on the cabinet remotely; Create a list of "My Patients," specific to a nurse, for cabinet and remote location. Workflow improvements would include: Allowing nurses to spend less time at the cabinet; Decrease queuing at the cabinet; Giving nurses more time for patient care; Provides increased efficiency for issues, wastes, and returns for cabinet transactions; Provides more time to review due medications prior to accessing the cabinet; Increases compliance for waste documentation.

TERMS & CONDITIONS

Omnicell, Inc. (herein referred to as the "Vendor"), submits its response to your Request for Proposal dated June 13, 2016 and agrees to supply and furnish to you information as requested in said Request for Proposal.

Notwithstanding any provision to the contrary, State of Nevada Purchasing Division -Division of Public and Behavioral Health hereby acknowledges and recognizes that if Omnicell's proposal is accepted, such acceptance will require that terms and conditions will be, at that time, mutually negotiated and agreed to by both parties. As such and upon mutual resolution, both parties will be contractually obligated to carry out their respective responsibilities as described therein.

Thank you for the opportunity to participate in your bid proposal process.

Omnicell, Inc.

OMNICELL, ANESTHESIA TT, DECISIONCENTER, FLEXBIN, MEDGUARD, OMNIBUYER, OMNICENTER, OMNIEVOLVE, OMNIGATE, OMNILINKRX, OMNIRX, OMNISUPPLIER, OPEN TOUCH, OPTIFLEX, SAFETYMED, SAFETYPAK, SAFETYSTOCK, SECUREVAULT, SINGLEPOINTE, SURE-MED, TOUCH & GO, VCOMMANDER, VDIRECTOR, VMANAGER, VSUITE, WORKFLOWRX, and the OMNICELL design mark are trademarks or registered trademarks of Omnicell, Inc. in the United States and internationally.

©1999 – 2016 All rights reserved

Furthermore, please note it is important to understand that Omnicell cabinets are custom configured for each specific environment within the hospital. Our goal is to mitigate size and configuration risk by conducting a thorough analysis of your medication and/or supply distribution needs. This includes a thorough analysis of your existing medication lists, a physical walk-through of every location within your facility and a needs assessment for your required distribution model. Being that this process is not an exact science and changes within the hospital may occur prior to installation, Omnicell's product is modular allowing for the flexibility to perform on-site changes from time to time. However, these are usually considered the exception.

Attachments

Master Agreement

Certificate of Insurance

Amendment 1

Amendment 2

Sample Implementation Plan

Omnicell Equipment Specifications

CORPORATE MASTER AGREEMENT

This **CORPORATE MASTER AGREEMENT**, dated as of May 31st, 2016 (the **"Effective Date"**), is made and entered into by and between Omnicell, Inc., a Delaware corporation, and its assigns, as applicable, having a business address of 590 E. Middlefield Road, Mountain View, CA 94043 (**"Omnicell"**) and **State of Nevada Department of Administration, Purchasing Division**, a Nevada corporation, having a business address of 515 E. Musser Street, Carson City, NV 89701 (**"Company"**) (each individually, a **"Party,"** and collectively, the **"Parties"**) and includes the General Terms and Conditions and all Schedules, Attachments and Exhibits attached hereto as indicated by an **'X'** marked in a box to the left of the appropriate Schedules, Attachments and/or Exhibits as specified below (collectively, the **"Agreement"**).

☒ **General Terms and Conditions**

☒ **Schedule A** Pricing Supplement

☒ **Schedule B** Financing Schedule for Lease Transactions Only

☒ **Schedule C** Software License Schedule

☒ **Schedule D** Support Services Schedule

☒ **Schedule E** Tax Schedule

☒ **Schedule F** Professional Services Schedule

☐ **Attachment F-1** Statement of Work (as applicable)

☒ **Schedule G** Preferred Relationship Terms and Conditions

☒ **Schedule H** Omnicell Products Pricing

☒ **Schedule I** Participating Customer Member Schedule

☒ **Schedule J** Product Categories Schedule

Each Party acknowledges that it has read the terms and conditions set forth in this Agreement and all schedules, attachments, exhibits, and addenda hereto, understands all terms and conditions, and agrees to be bound thereby. This Agreement is an integrated, final, complete, and exclusive statement of the Parties' understandings with respect to the subject matter hereof. This Agreement supersedes all previous agreements, intentions, or representations, oral or written, relating hereto. This Agreement may be modified only by a written amendment signed by a duly authorized representative of each Party, and not by course of performance. ***No additional or contradictory terms and conditions included on any Customer purchase order (whether offered during the initial transaction or future transactions) shall operate as an amendment to this Agreement, and shall have no force and effect, even if such terms and conditions expressly state that they are intended to supersede the terms of this Agreement, Omnicell is required to countersign the purchase order, and/or Omnicell fails to object to such terms and conditions.***

By signing this Agreement, each signatory represents that he or she has the authority to bind his or her respective Party to this Agreement.

Accepted:

OMNICELL, INC.	**STATE OF NEVADA DEPARTMENT OF ADMINISTRATION, PURCHASING DIVISION**
Signature	Signature
Print Name:	Print Name:
Title:	Title:

This document contains the Confidential Information of Omnicell, Inc.
Use or disclosure of this document without Omnicell's express written consent is prohibited.

GENERAL TRANSACTIONAL TERMS AND CONDITIONS*

*** All defined terms are capitalized herein and defined in Section 11 of the General Transactional Terms and Conditions**

1. ESTABLISHING AND DELIVERING THE ORDER.

1.1 Ordering Terms and Conditions. Once Customer has identified a particular Omnicell quote as the Customer-approved quote for an order, Omnicell will convert such quote for Customer acknowledgement into the form of a Pricing Supplement substantially in the form provided by an Omnicell representative and incorporated into this Agreement as Schedule A. Such Pricing Supplement is intended to define a separate contract particular to that order, incorporating by reference the terms and conditions of the applicable portions of this Agreement. A Pricing Supplement may also contain other terms or conditions, mutually agreed upon by Customer and Omnicell that apply specifically to that particular order but are not directly covered by this Agreement. Once the Pricing Supplement is authorized by Customer, Customer shall provide to Omnicell the executed Pricing Supplement and a written purchase order for the applicable transaction evidencing the Customer's internal authorization of funds required to complete the order (**"Purchase Order"**). Customer agrees that each Pricing Supplement will be signed by a representative having the authority to bind Customer and that Omnicell may presume that such representative has such authority.

Further to the above, Company represents and warrants that Customer is a member of Company and as such each such Customer has the right to purchase and/or or lease the Delivered Products pursuant to this Agreement. In addition, Company represents and warrants that it has the legal right and hereby does contractually bind its members to the terms and conditions of this Agreement. As such, Company acknowledges and agrees that each Customer's transactions for the Delivered Products and Support Services shall be governed by this Agreement, specifically, the General Transactional Terms and Conditions along with Schedules A-F, respectively, as executed by Company on behalf of its members.

1.2 Order Acceptance. A binding order is created when Omnicell accepts and executes the Customer-executed Pricing Supplement matched with a Customer Purchase Order. Upon acceptance and execution of the applicable Pricing Supplement, Omnicell agrees to deliver the Delivered Products in accordance with the terms of this Agreement and the applicable Pricing Supplement.

1.3 Payment Terms and Late Fees. Customer agrees to pay, when due, all Scheduled Payments. Unless otherwise expressly stated in an applicable Pricing Supplement, all amounts due under this Agreement will be invoiced to Customer upon shipment of the Delivered Products, and will be due and payable by Customer thirty (30) days after the date of such invoice. Any amounts due under this Agreement not received by Omnicell within fifteen (15) days of the due date will be subject to (a) a late fee of one and one half percent (1 1/2%) per month, or the maximum charge permitted by law, whichever is less, and (b) a service charge of five percent (5%) of the amounts overdue.

1.4 Taxes. Unless Customer is tax exempt from the applicable tax, has completed Schedule E and provided Omnicell with Customer's tax exempt certificate as described below, Customer will pay all taxes, duties, levies, tariffs or similar charges of any kind (including sales, use, property, withholding or value added taxes) imposed by any federal, state, local, or other governmental entity for products or services provided under this Agreement, excluding only taxes based solely on Omnicell's net income (collectively, **"Taxes"**). Customer agrees to pay any invoices for Taxes in a timely manner.

To the extent Customer is exempt from any Taxes imposed for Delivered Products or Support Services provided under this Agreement, then Customer agrees to complete and provide to Omnicell the Tax Document set forth in Schedule E, to identify specifically the Taxes from which Customer is exempt and to provide Omnicell with the governmental certificate evidencing such exemption. Should Customer's tax-exempt status change during the Term, then the previous paragraph will apply from the date Customer's change in tax status becomes effective.

1.5 Insurance. Until the Purchase Price or all Monthly Lease Payments, as applicable, for a unit of the Delivered Products are paid in full, Customer agrees, at its own cost and expense, to (a) keep such Delivered Product fully insured against loss; and (b) provide Omnicell, at Omnicell's option, certificates or other evidence of such insurance reasonably acceptable to Omnicell.

2. DELIVERY. Omnicell will use commercially reasonable efforts to ship the Delivered Products to Customer's installation site pursuant to a schedule to be mutually determined by Customer and Omnicell within the Project Plan as is defined in Section 3.2 below. Unless otherwise stated on an applicable Pricing Supplement, Customer acknowledges that it shall accept delivery of such Delivered Products within twelve (12) months of providing Omnicell with an executed Pricing Supplement for such Delivered Products. Unless otherwise stated in a Pricing Supplement, all shipments are FOB Destination, provided however; shipping and freight will be arranged and invoiced by Omnicell but paid by Customer. Omnicell agrees to assume and bear the entire risk of casualty or damage to the Delivered Products from any cause whatsoever from the date of shipment of a Delivered Product from Omnicell's dock to Customer's premises. Customer agrees to assume and bear the entire risk of casualty or damage to the Delivered Products from any cause whatsoever from the date of delivery acceptance at Customer's premises. No casualty or damage, after such delivery, will relieve Customer from the obligation to make Scheduled Payments or to comply with any other obligations under this Agreement. Customer's acceptance of delivery of any Delivered Product hereunder will be

This document contains the Confidential Information of Omnicell, Inc.
Use or disclosure of this document without Omnicell's express written consent is prohibited.

deemed Customer's acknowledgement that (a) all of the Delivered Products listed in the applicable Purchase Order have been received, and (b) such Delivered Products show no obvious signs of physical damage. ***Customer's acceptance of delivery does not constitute or imply Customer's acceptance of installation or that the Delivered Products are in working order.***

3. INSTALLATION AND ACCEPTANCE.

3.1 Omnicell's Installation Obligations. Omnicell agrees to install the Delivered Products identified in a Pricing Supplement at the quoted amounts set forth in such Pricing Supplement. Omnicell further agrees to work with Customer to enter into a mutually agreeable Project Plan (as is defined in Section 3.2 below) to ensure proper scheduling, installation and implementation of such Delivered Products. Omnicell will make commercially reasonable efforts to complete the installation of such Delivered Products in a timely manner in accordance with the Project Plan.

3.2 Customer's Installation Commitments. Customer agrees to participate (and make available for participation) all appropriate departmental representatives from Customer's pharmacy or material management (as applicable), nursing, education, information technology (IT), construction and maintenance organizations in a pre-implementation meeting, at a time and location mutually acceptable to Omnicell and Customer, during which the Parties will mutually agree upon an implementation project plan and schedule (the **"Project Plan"**) to be reasonably adjusted by mutual agreement of the Parties as conditions might change during the installation process.

3.3 Installation Acceptance. When each Delivered Product is successfully installed and is, in all material respects, up and running in accordance with its Functional Specifications, Customer agrees to promptly sign an acknowledgement form confirming the foregoing. In order to facilitate Customer's signature on an acknowledgement form, Omnicell agrees to conduct a demonstration showing that the Delivered Product functions as set forth in the previous sentence. If Omnicell conducts such demonstration successfully, and within ten (10) days thereafter Customer does not either: (a) sign and return to Omnicell the acknowledgement form, or (b) provide Omnicell with written notice detailing the material nonconformities between the Delivered Products and the applicable Functional Specifications, then the Delivered Product will be deemed accepted by Customer. The foregoing does not limit Omnicell's other obligations to Customer, or Customer's other rights and remedies, as set forth in this Agreement.

3.4 Customer Provided Products. Customer will be solely responsible for procuring, purchasing, installing, and maintaining all equipment, telephone lines, communications interfaces, Customer operating systems or support software and other hardware necessary to operate the Delivered Products, as more fully described in the applicable Project Plan. All such Customer-provided equipment and software must meet Omnicell's specifications in order to facilitate the operation of Delivered Products.

4. TRAINING. Omnicell will provide training in the system management and use of the Delivered Products at Omnicell's designated training facility to one of Customer's employees (except as otherwise provided in a Pricing Supplement) selected by Customer who is qualified to act as a system administrator (**"System Administrator"**). Such training will be provided at the rates set forth in the Pricing Supplement. The System Administrator is responsible for (a) administering and managing the performance of the Delivered Products, including maintaining the files and monitoring the performance of the Delivered Products; (b) reviewing and evaluating all end-user requests for service and (c) informing Omnicell of any problems that the System Administrator cannot resolve. Travel and other related expenses for System Administrator training will be the responsibility of Customer. During the installation process, Omnicell will also provide reasonable end-user training (on a "train-the-trainer" basis) for each location of Delivered Products, at the rates set forth in the applicable Pricing Supplement to the extent charges are applicable for training for those Delivered Products.

5. SUPPORT SERVICES. So long as Customer has selected a Support Services Plan and is current with the payment of the applicable Monthly Support Fee, Omnicell agrees to provide Support Services pursuant to the Support Services terms and conditions more fully provided for within Schedule D, Support Services Schedule, such that the Delivered Products materially conform to the applicable Functional Specifications. As such and during the Service Term, Omnicell will make adjustments to and replace component parts of the Delivered Products, as Omnicell reasonably deems necessary. If Omnicell is unable to repair an item of Delivered Products, Omnicell will replace it at Omnicell's discretion as is more fully described in Section 1.5 of Schedule D.

6. TERM AND TERMINATION.

6.1 Term. This Agreement will become effective on the Effective Date and will continue in full force and effect unless otherwise terminated as provided herein (the **"Term"**). Without limiting the generality of the foregoing, the term of any Pricing Supplement will be as set forth in such Pricing Supplement. Except as stated otherwise in a Schedule, attachment and/or exhibit to this Agreement, individual Schedules, attachments and/or exhibits to this Agreement may be terminated in accordance with this Section 6; provided, however, in no event will these General Terms and Conditions ever terminate while any Pricing Supplement, Schedule, attachment and/or exhibit remains in effect.

6.2 Termination for Cause. Either Party (except for Customer with respect to Section 6.2(a) below) may, by written notice to the other Party, terminate this Agreement if any of the following events occur (**"Termination Events"**):

This document contains the Confidential Information of Omnicell, Inc.
Use or disclosure of this document without Omnicell's express written consent is prohibited.

(a) Customer fails to pay to Omnicell any Scheduled Payments within fifteen (15) days after Omnicell provides Customer written notice of such non-payment; or

(b) A Party is in material breach of any non-monetary term, condition or provision of this Agreement, which breach is not cured within thirty (30) days after the non-breaching Party gives the breaching Party written notice of such breach.

6.3 Effect of Termination. Upon termination of this Agreement for any reason, Customer will immediately discontinue use of the Licensed Software, Support Services, Documentation and Omnicell Confidential Information, and, within ten (10) days of such termination, certify in writing to Omnicell that any and all copies, extracts or derivatives of the Licensed Software, Documentation and Omnicell Confidential Information, in whole or in part, in any form, have either been returned to Omnicell or destroyed in accordance with Omnicell's specific instructions.

6.4 Survival. Notwithstanding any termination of this Agreement, General Terms and Conditions Sections 1.3 (Payment Terms and Late Fees), 1.4 (Taxes), 1.5 (Insurance) (for the period set forth therein), 6.3 (Effect of Termination), 6.4 (Survival), 7.2 (Warranty Disclaimer), 9 (Limitation of Liability), 10 (General), and 11 (Definitions); Schedule B Sections 5 (Unconditional Payment Obligation For Monthly Lease Payments), 7 (Return of Delivered Products), 8 (Insurance and Further Assurances) (for the period set forth therein) and 9 (Remedies); Schedule C Sections 2 (Title), 3 (Restrictions), 4 (Ownership of Developments to Omnicell's Licensed Software), 5 (Licensed Software Audit), and 7 (U.S. Government Licenses); and Schedule F Sections 2 (Professional Services Fees and Expenses), 3 (Intellectual Property Rights), 4.3 (Warranty Disclaimer), 5 (Third Party Claim Indemnification for Customer's Medical Decisions), 6 (No Restrictions on Professional Service Offerings), 7 (Effect of Termination; Payment Upon Termination), and 8 (General Definitions) will, to the fullest extent of the law, survive termination of this Agreement indefinitely. All other rights and licenses granted hereunder will cease upon termination.

7. WARRANTY AND DISCLAIMER.

7.1 Warranty. In the event that the media on which any Licensed Software is embodied contains material defects, Omnicell will replace such media. This will be Omnicell's sole and exclusive obligation with respect to such warranty for the Licensed Software.

7.2 Warranty Disclaimer. OTHER THAN AS EXPRESSLY PROVIDED IN THIS AGREEMENT, OMNICELL SPECIFICALLY DISCLAIMS ALL EXPRESS, IMPLIED, OR STATUTORY WARRANTIES, INCLUDING ALL IMPLIED WARRANTIES OF MERCHANTABILITY, NONINFRINGEMENT, FITNESS FOR A PARTICULAR PURPOSE OR TITLE. THIS WARRANTY GRANTED HEREIN DOES NOT COVER ANY PRODUCT THAT CUSTOMER MAY USE, CREATE OR INSTALL THAT IS NOT PROVIDED BY OMNICELL.

IN ADDITION, OMNICELL MAKES NO REPRESENTATIONS AND WARRANTIES ABOUT THE IMPACT OF CUSTOMER'S USE OF THE DELIVERED PRODUCTS OR CUSTOMER'S USE OF OTHER MEDICAL DEVICES OR EQUIPMENT. THE USE OF THE DELIVERED PRODUCTS AND THE CLINICAL INFORMATION CONTAINED THEREIN IS INTENDED TO SERVE AS A SUPPLEMENT TO, AND NOT A SUBSTITUTE FOR THE KNOWLEDGE, EXPERTISE, SKILL, AND JUDGMENT OF PHYSICIANS, PHARMACISTS, OR OTHER HEALTHCARE PROFESSIONALS IN PATIENT CARE. THE ABSENCE OF A WARNING FOR A GIVEN DRUG OR DRUG COMBINATION SHOULD NOT BE CONSTRUED TO INDICATE THAT THE DRUG OR DRUG COMBINATION IS SAFE, APPROPRIATE OR EFFECTIVE IN ANY GIVEN PATIENT. EXCEPT AS OTHERWISE EXPLICITY STATED IN THIS AGREEMENT, IN NO EVENT WILL OMNICELL BE LIABLE FOR ANY DAMAGES ASSOCIATED WITH CUSTOMER'S USE OF THE DELIVERED PRODUCTS OR CUSTOMER'S USE OF OTHER MEDICAL DEVICES OR EQUIPMENT.

8. INDEMNIFICATION.

8.1 Infringement.

(a) Indemnification. Omnicell will defend or, at its sole option, settle, any third party claim(s) brought against Customer relating to infringement of any United States trademark, copyright or trade secret by the Delivered Product as installed, and indemnify Customer against all damages and costs finally awarded against Customer under any such claim or action by a court of final jurisdiction. Omnicell may, at its sole option and expense, either: (i) procure for Customer the right to use the infringing Delivered Product as provided herein; (ii) replace the infringing Delivered Product with a non-infringing product; (iii) modify the infringing Delivered Product so that it is not infringing; or, if options (i)-(iii) are not commercially reasonable, then (iv) demand return of the infringing Delivered Product, refund the remaining value of fees associated with such Delivered Product to Customer (as amortized over a one hundred twenty (120) month life) and terminate this Agreement. Upon exercise of option (iv) in the previous sentence, Omnicell will have no further obligations or liability to Customer with respect to the subject of this Section 8.1 for the infringing Delivered Product in question. Except as specified in this paragraph, Omnicell will not be liable for any costs or expenses incurred without its prior written consent.

(b) Exceptions. The foregoing indemnity obligations will not apply to the extent the infringement arises as a result of (i) modifications to the Delivered Product made by any party other than Omnicell or Omnicell's authorized representative, (ii) use of other than the most current version of the Delivered Products generally made available by Omnicell to Customer, (iii) the combination or use of the Delivered Product with materials,

This document contains the Confidential Information of Omnicell, Inc.
Use or disclosure of this document without Omnicell's express written consent is prohibited.

products, system, software or equipment not furnished by Omnicell, (iv) use of the Delivered Product not in accordance with the applicable Documentation, or (v) use of the Delivered Product outside the scope of this Agreement.

(c) THE FOREGOING STATES OMNICELL'S SOLE AND EXCLUSIVE OBLIGATION AND CUSTOMER'S SOLE AND EXCLUSIVE REMEDY FOR INFRINGEMENT CLAIMS AND ACTIONS.

8.2 Third Party Claim Indemnification By Omnicell. Omnicell hereby agrees to indemnify, defend and hold harmless Customer and its successors, assigns, agents and employees against any and all third-party liabilities, losses, damages, costs, claims and expenses (including reasonable attorney fees) relating to personal injury or property damage to the extent arising as a direct result of (a) the gross negligent acts or intentional misconduct of Omnicell's employees or agents during the installation of the Delivered Products or provision of Support Services; or (b) the negligent design or manufacture of the Delivered Products, except for claims that arise where there is also any intervening action or conduct by Customer or personnel controlled by Customer (**"Intervening Conduct"**) between the negligence of Omnicell and the personal injury or property damage. By way of illustration and not limitation, Intervening Conduct includes any action or conduct on the part of Customer's staff or contractors in administering medication to a patient of Customer, notwithstanding the fact that the medication may have been stored within and/or dispensed from the Delivered Products. For the purposes of this provision, Customer acknowledges Intervening Conduct on the part of Customer or its staff or contractors includes, without limitation, any failure to follow hospital protocols relating to the administering of medication to patients.

8.3 Third Party Claim Indemnification By Customer. Customer hereby agrees to indemnify, defend and hold harmless Omnicell and its successors, assigns, agents and employees against any and all third party liabilities, losses, damages, costs, claims and expenses (including reasonable attorney fees) arising out of the use, possession or control of the Delivered Products or any set of circumstances whereby there is any Intervening Conduct between any negligence of Omnicell and the stated liability claim, including, claims arising in contract or tort, except for claims resulting from Omnicell's intentional misconduct, or claims for infringement as described in Section 8.1 (Infringement).

8.4 Indemnification Process. Each Party seeking indemnification pursuant to this Section 8 shall take reasonable steps to mitigate any potential expenses and shall provide the indemnifying Party with (a) prompt written notice of any such claim or action; (b) the sole control and authority over the defense or settlement of such claim or action (provided the indemnified Party is not required to make any admissions or ongoing commitments without prior authorization); and (ci) proper and full information and assistance to settle and/or defend any such claim or action. The indemnified Party will retain the right to employ separate counsel and participate in the defense at its own expense; provided that the indemnifying Party shall control the defense.

9. LIMITATION OF LIABILITY. EXCEPT IN CONNECTION WITH A BREACH OF A PARTY'S CONFIDENTIALITY OBLIGATIONS SET FORTH IN SECTION 10.1 (CONFIDENTIALITY) BELOW, OR A BREACH OF THE SCOPE OF THE LICENSES GRANTED IN SCHEDULE C (SOFTWARE LICENSE SCHEDULE) ATTACHED HERETO, IN NO EVENT WILL EITHER PARTY BE LIABLE TO THE OTHER FOR ANY INDIRECT, SPECIAL, INCIDENTAL, PUNITIVE, EXEMPLARY OR CONSEQUENTIAL DAMAGES INCLUDING LOSS OF PROFITS, LOSS OF USE, BUSINESS INTERRUPTION, OR LOSS OF DATA IN CONNECTION WITH OR ARISING OUT OF THIS AGREEMENT OR ITS TERMINATION REGARDLESS WHETHER ARISING UNDER CONTRACT, TORT, OR ANY OTHER THEORY, EVEN IF SUCH PARTY HAS BEEN ADVISED OF THE POSSIBILITY OF SUCH DAMAGES. IN NO EVENT WILL OMNICELL'S TOTAL CUMULATIVE LIABILITY TO CUSTOMER FOR DAMAGES UNDER THIS AGREEMENT OR OTHERWISE EXCEED THE AMOUNT OF PAYMENTS ACTUALLY PAID BY CUSTOMER TO OMNICELL HEREUNDER. MULTIPLE CLAIMS WILL NOT ENLARGE THIS LIMIT. THIS LIMITATION OF LIABILITY SHALL APPLY NOTWITHSTANDING ANY FAILURE OF ESSENTIAL PURPOSE OF ANY EXCLUSIVE REMEDY HEREIN.

10. GENERAL.

10.1 Confidentiality.

(a) Protection of Confidential Information. Each Party will retain the other Party's Confidential Information in the strictest confidence and will not disclose such Confidential Information to any person, third party, contractor, agent, assign, company, machine, or other person or entity without the other Party's prior express written consent. Notwithstanding the foregoing, each Party may disclose the other Party's Confidential Information to: (i) any of its directors, officers and employees, or (ii) to legal counsel, auditors and any other consultants; provided that the recipient(s) (a) has a need to know the information, (b) has been advised of the confidential nature of the information, and (c) is under an obligation of confidentiality that is at least as protective of the disclosing party as the confidentiality obligations contained herein and an obligation to use the information solely to assist the Party it represents in performing its obligations under or realizing the benefits contemplated for such Party under this Agreement.

(b) Restricted Use. Each Party agrees to:

(i) use the Confidential Information only for the purposes of this Agreement and as expressly permitted by this Agreement;

(ii) not make copies of or store Confidential Information or any part thereof except as expressly permitted by this Agreement; and

This document contains the Confidential Information of Omnicell, Inc.
Use or disclosure of this document without Omnicell's express written consent is prohibited.

(iii) reproduce and maintain on any copies of any Confidential Information such proprietary legends or notices (whether of disclosing Party or a third party) as are contained in or on the original or as the disclosing Party may otherwise reasonably request.

(c) **Required Disclosure.** Nothing in this Agreement will prohibit either Party from disclosing Confidential Information if legally required to do so by law, judicial or governmental order, provided that the disclosing Party will give the other Party prompt notice of such requirement prior to disclosure and cooperate with the other Party in the event that the other Party elects to contest such disclosure or seek a protective order at the other Party's sole expense with respect thereto.

10.2 **Notices.** Any notice required or permitted under the terms of this Agreement or required by law must be in writing to the address set forth on the cover page of this Agreement and must be: (a) delivered in person; or (b) sent by first-class registered mail, or air mail, as appropriate; or (c) sent by overnight air courier, in each case delivery costs prepaid and properly posted to the address indicated on the first page of this Agreement. Notices will be considered to have been given at the time of actual delivery in person, three (3) business days after deposit in the mail as set forth above, or one (1) business day after delivery to an overnight air courier service.

10.3 **Assignment.** Customer will not effect, or attempt to effect, any assignment (by operation of law or otherwise), sale, transfer, sublease or sublicense of this Agreement or the Delivered Products, without Omnicell's prior written consent, which consent will not be unreasonably withheld; provided, however, that Omnicell may withhold its consent to a proposed assignment, in its sole discretion, if such assignment is to an Omnicell competitor or involves Delivered Products that are financed pursuant to Schedule B, Financing Schedule, attached hereto. Any assignment or attempted assignment in violation of the foregoing shall be null and void.

10.4 **Independent Contractors.** The relationship of Omnicell and Customer established in this Agreement is that of independent contractors and nothing contained in this Agreement will be construed or implied to the contrary.

10.5 **No Waiver.** The failure of either Party to enforce at any time any of the provisions of this Agreement will not be deemed to be a waiver of the right of either Party thereafter to enforce any such provisions. No waiver, amendment or variation to this Agreement will be valid unless in writing and signed by both Parties.

10.6 **Force Majeure.** Non-performance of either Party will be excused to the extent that performance is rendered impossible by strike, fire, war, flood, governmental acts or orders or restrictions, or act of God, or any other reason where failure to perform is beyond the control of the non-performing Party.

10.7 **Publicity.** The Parties acknowledge that they may desire to use one another's name in press releases, brochures, financial reports and the like. As such, each Party agrees that the other Party may use its name in such a manner after receiving the non-publishing Party's prior written consent, with such consent not to be unreasonably withheld.

10.8 **Export Administration.** Customer agrees to comply fully with all relevant regulations of the U.S. Department of Commerce and with the U.S. Export Administration Act to assure that any Delivered Product is not exported in violation of United States Law and to comply fully with any other regulations or laws relating to such export or import into another country. Customer will be responsible for any duties, customs charges or other taxes or fees relating to such export.

10.9 **Dispute Resolution.** Except as provided below, all disputes arising from or relating to this Agreement will be resolved as follows: the senior management of both Parties will promptly meet to attempt to resolve such disputes. If such senior management cannot resolve the dispute within two (2) business days (or other mutually acceptable time frame), either party may make a written demand for formal dispute resolution and specify therein the scope of the dispute. Within ten (10) business days after such written notification, the Parties agree to meet for one (1) day with an impartial mediator (mutually and reasonably agreeable by the Parties) and consider in good faith dispute resolution alternatives other than litigation. If an alternative method of dispute resolution is not agreed upon within twenty (20) business days after the written demand for formal dispute resolution, either party may begin litigation proceedings. This provision will not preclude either Party from seeking equitable relief to protect its interests, including seeking preliminary and permanent injunctive relief, as well as money damages, in any dispute involving its Confidential Information or Intellectual Property Rights.

10.10 **Governing Law.** This Agreement will be governed in accordance with the laws of the State of California, without reference to conflict of laws principles that would require the application of the laws of another jurisdiction. The United Nations Convention on Contracts for the International Sale of Goods will not apply to this Agreement. To the extent permissible by law, the Uniform Computer Information Transaction Act will also not apply to this Agreement.

10.11 **Severability.** In the event that any provision of this Agreement is for any reason held to be unenforceable, null, void or otherwise ineffective or invalid by a court of competent jurisdiction, such provision shall be construed so as to render it enforceable and effective to the maximum extent possible, and the validity, legality and enforceability of the remaining provisions hereof shall not in any way be affected or impaired thereby.

10.12 **Counterparts.** This Agreement may be executed in counterparts, each of which will be deemed an original, but both of which together will constitute one and

This document contains the Confidential Information of Omnicell, Inc.
Use or disclosure of this document without Omnicell's express written consent is prohibited.

the same instrument. If this Agreement is executed in counterparts, no signatory will be bound until both the parties named below have duly executed or caused to be duly executed a counterpart. Executed copies may be delivered through facsimile transmission and a facsimile copy will be accepted as an original.

10.13 Entire Agreement. This is an integrated Agreement and all attachments, exhibits and schedules agreed to by the Parties are incorporated herein by reference, are an integral part of the Agreement, will be read and interpreted together with the General Terms and Conditions as a single document and constitute the entire, final, complete and exclusive agreement between the Parties and supersede all previous and contemporaneous agreements, intentions, negotiations, discussions or understandings, oral or written, relating to this Agreement. This Agreement may not be modified or amended except in a writing signed by a duly authorized representative of each Party. Both Parties acknowledge having read the terms and conditions set forth in this Agreement and all attachments, exhibits and schedules hereto, understand all terms and conditions, and agree to be bound thereby.

11. DEFINITIONS.

11.1 "Confidential Information" means any information, technical data, or know-how, including the pricing included in any Omnicell document, development, inventions, processes, designs, drawings, formulas, engineering, marketing, finances, financial models, and business plans and the terms of this Agreement that is disclosed by one party to another and is not in any of the categories described in (a)-(c) below. Confidential Information does not include information which (a) is in the possession of the receiving party at the time of disclosure as shown by the receiving party's files and records immediately prior to the time of disclosure; or (b) prior to or after the time of disclosure becomes part of the public knowledge, not as a result of any inaction or action of the receiving party; or (c) is approved for release by the disclosing party.

11.2 "Company" shall mean the controlling entity of such Customers who has the ability to bind its members to the terms and conditions of this Agreement.

11.3 "Customer" shall mean any current or future member of Company as of the Effective Date and as set forth in Schedules G and I that shall be to permitted to purchase or lease Delivered Products, license Licensed Software and/or receive the provision of Support Services pursuant to the terms and conditions of this Agreement as applicable.

11.4 "Delivered Products" means the Financed Products, Purchased Products and/or the Licensed Software and all associated Documentation (together, with all replacement parts which may be provided pursuant to Support Services) which is/are provided to Customer by Omnicell pursuant to an applicable Pricing Supplement.

11.5 "Documentation" means help files and/or instruction manuals regarding the use of the Delivered Products and/or Support Services generally made available by Omnicell to its customers as delivered with the Delivered Products.

11.6 "Financed Products" means the Licensed Software licensed to Customer, and/or Omnicell hardware which is/are leased to Customer pursuant to this Agreement, as more specifically set forth in a Pricing Supplement for such Financed Products.

11.7 "Functional Specifications" means the specifications of the Delivered Products contained in the Documentation.

11.8 "Intellectual Property Rights" means any patent rights, copyrights, trade secrets, trade names, trademarks, service marks, moral rights, design rights, mask works (if any), whether registered or unregistered, and including any application for registration of any of the foregoing and all rights or forms of protection of a similar nature of having equivalent or similar effect to any of these, and any other similar rights recognized under the laws of any jurisdiction whatsoever or any international conventions or treaties which may subsist anywhere in the world.

11.9 "Licensed Software" means: (a) the computer programs licensed to Customer in machine executable object code form pursuant to this Agreement, including interfaces, if any, as specifically identified in an applicable Pricing Supplement, and (b) Updates and Upgrades to such software as provided as part of Support Services set forth in Schedule D, Support Services Schedule.

11.10 "Monthly Lease Payment" means the monthly lease payment for each item of Financed Products and installation as set forth on an applicable Pricing Supplement for Financed Products for the number of consecutive months set forth in such Financed Products Pricing Supplement.

11.11 "**Monthly Support Fee"** will mean the monthly Support Services fee applicable for the components, elements and units of the Delivered Products (including Licensed Software) as set forth on the applicable Pricing Supplement.

11.12 "Purchased Products" means the license of Licensed Software to Customer and/or Omnicell hardware which is/are purchased by Customer pursuant to this Agreement, as more specifically set forth in an applicable Pricing Supplement.

11.13 "Purchase Price" means the payment set forth on the applicable Pricing Supplement for the purchase of the Purchased Products.

11.14 "Scheduled Payments" means all payments set forth on the applicable Pricing Supplement, including Monthly Lease Payments, Monthly Support Fees and Purchase Price, as applicable.

This document contains the Confidential Information of Omnicell, Inc.
Use or disclosure of this document without Omnicell's express written consent is prohibited.

11.15 "Support Services" means the Support Services as specifically agreed to by the Parties as set forth in a Pricing Supplement and as more fully described in Schedule D, Support Services Schedule.

This document contains the Confidential Information of Omnicell, Inc.
Use or disclosure of this document without Omnicell's express written consent is prohibited.

SCHEDULE A

PRICING SUPPLEMENT

(Finalized Quote(s))

This document contains the Confidential Information of Omnicell, Inc.
Use or disclosure of this document without Omnicell's express written consent is prohibited.

SCHEDULE B

FINANCING SCHEDULE FOR LEASE TRANSACTIONS ONLY

As a service to our customers, Omnicell has entered into contractual relationships with several financing companies that, based on pre-existing knowledge of Omnicell's products and service offerings, are willing to offer Customers financing terms for a term lease (typically 60 months) of Omnicell's Delivered Products. Therefore, agreement by Customer to the following additional terms is a prerequisite to the finance company accepting Customer's lease. Further, notwithstanding any execution of this Agreement or a Pricing Supplement, it is a precondition to Omnicell having any obligations under this Schedule B that Customer receive credit approval from such financing company, including execution by Customer of all of the financing company's documents relating to such financing.

The terms contained in this Schedule B, together with the terms contained in the General Terms and Conditions, will govern the financing of the Financed Products and/or Support Services by Omnicell to Customer. In the event of a conflict between this Schedule B and the General Terms and Conditions, the terms in Schedule B will take precedence.

1. LEASE INITIATION. With respect to the Financed Products and/or financed Support Services, the initial lease term will commence upon Customer's execution of the applicable Financed Products Pricing Supplement and will continue as set forth on such Pricing Supplement (the **"Initial Lease Term"**). Customer understands that time is of the essence as to its performance. Unless otherwise expressly stated in an applicable Pricing Supplement, the first Monthly Lease Payment and Monthly Support Fee due under this Agreement will be invoiced to Customer upon shipment of the Financed Products and monthly thereafter. Customer agrees to pay all Monthly Lease Payments and Monthly Support Fees in advance and no later than the date designated on the invoice. Invoices that are not disputed in writing within thirty (30) days from the date of invoice may not be contested nor offset by Customer for any reason. Monthly Lease Payments and Monthly Support Fees will be made at such place as Omnicell may designate in writing.

2. OWNERSHIP OF FINANCED PRODUCTS. Omnicell (or its assignee) is the owner of the Financed Products and will retain at all times title to such Financed Products. No transfer of title to the Financed Products has occurred by virtue of the execution of the applicable Financed Products Pricing Supplement nor will title be transferred to Customer upon expiration of such lease.

3. LOCATION OF FINANCED PRODUCTS. Customer agrees to keep and use the Financed Products only at the delivery address set forth in the Agreement and agrees that such Financed Products will not be removed from that address unless Customer obtains prior written consent from Omnicell to move such Financed Products.

4. NO EARLY TERMINATION. Notwithstanding any provision to the contrary in this Agreement, including the termination for cause provisions set forth in Section 6.2 of the General Terms and Conditions (Termination for Cause), in no event may Customer terminate this Financing Schedule or any applicable Financed Products Pricing Supplement prior to the expiration of the Initial Lease Term.

5. UNCONDITIONAL PAYMENT OBLIGATION FOR MONTHLY LEASE PAYMENTS. THE OBLIGATION TO MAKE MONTHLY LEASE PAYMENTS FOR THE FINANCED PRODUCTS IS ABSOLUTE AND UNCONDITIONAL AND WILL NOT BE SUBJECT TO ANY DISPUTES, CLAIMS, DAMAGES, LIABILITIES, OR OFFSETS AGAINST ANY PAYMENTS DUE UNDER ANY AGREEMENTS FOR ANY REASON WHATSOEVER (INCLUDING REMEDIES ARISING FROM NON-PERFORMANCE BY OMNICELL OR FROM ANY FAILURE OF, OR DAMAGE TO, THE FINANCED PRODUCTS). NOTWITHSTANDING CUSTOMER'S OBLIGATIONS TO MAKE THE MONTHLY LEASE PAYMENTS STATED ABOVE, IF OMNICELL HAS BREACHED ITS OBLIGATIONS TO CUSTOMER UNDER THIS AGREEMENT, CUSTOMER RETAINS ITS RIGHTS IN LAW AND EQUITY TO RECOVER DAMAGES DIRECTLY FROM OMNICELL.

6. END OF LEASE TERM OPTIONS. At the end of the Initial Lease Term for each unit of Financed Products, Customer may choose to: (a) return a given Financed Delivered Product to Omnicell, or (b) request a Pricing Supplement for Financed Products from Omnicell and issue a new Purchase Order, in each case extending all provisions of this Agreement related to the financing of the Financed Products.

If Customer fails to notify Omnicell in writing of its selection of one of the previous two options prior to the end of any Initial Lease Term, the applicable Pricing Supplement for Financed Products will automatically convert to a month-to-month finance agreement at the then-current month-to-month finance rates for the affected Financed Products. In case of such conversion to a month-to-month finance agreement, all provisions of this Agreement related to the financing of the Financed Products will remain in full force and effect.

7. RETURN OF DELIVERED PRODUCTS. If Customer decides to return the Financed Products at the end of an applicable lease term, Customer agrees to (a) return the Financed Products to Omnicell promptly and in a condition as good as received, allowing for normal wear and tear, to any place in the continental United States that Omnicell designates; (b) prepay all expenses of crating and shipping by means Omnicell designates and (c) insure the shipment properly. At Omnicell's option, Omnicell agrees to supply Customer with crating and packing materials. Customer agrees to pay Monthly Lease Payments for a given piece of Financed Products for each month (or part

This document contains the Confidential Information of Omnicell, Inc.
Use or disclosure of this document without Omnicell's express written consent is prohibited.

thereof) following the expiration of the applicable lease term until such Financed Delivered Product is returned.

8. INSURANCE AND FURTHER ASSURANCES. In addition to the insurance requirements set forth in Section 1.5 of the General Terms and Conditions (Insurance), until the total Monthly Lease Payments are paid in full Customer agrees, at its own cost and expense to (a) name Omnicell as an additional insured on all applicable insurance policies; and (b) have Customer's insurance company notify Omnicell of any material changes in coverage during the lease term. Also, Customer agrees to provide such additional documents, instruments and Uniform Commercial Code financing statements as are reasonably requested by Omnicell to assist Omnicell in completing the transactions contemplated by this Financing Schedule, including the applicable Pricing Supplement for Financed Products to protect Omnicell's rights or its assignee's rights to the Financed Products. Customer hereby authorizes Omnicell to file UCC financing statements, amendments and assignments relating to the Financed Products in any location and execute the same as Customer's attorney-in-fact or representative. If Omnicell assigns the Financed Products, Customer agrees to execute such documents as Omnicell may reasonably request confirming Customer's obligations under this Agreement and Customer agrees to make all Monthly Lease Payments and other amounts due under this Agreement directly to the assignee. If it is determined that the Monthly Lease Payments include interest, no such interest will exceed the amount legally allowed.

9. REMEDIES. Notwithstanding and in addition to any provisions set forth in Section 6.3 of the General Terms and Conditions (Effect of Termination), at any time thirty (30) days after Omnicell provides Customer with written notice of its default, Omnicell will have the right to: (a) take immediate possession of the Financed Products without any process of law, enter upon any premises where the Financed Products may be and remove them without notice of Omnicell's intention to do so, without being liable in any action or other proceeding to Customer; (b) at Omnicell's option, sell or re-lease the Financed Products including the Licensed Software at any public or private sales for cash or on credit and Customer will be liable for the expenses incurred in the repossession, recovery, storage, repair, sale, re-lease, re-licensing and court costs, in addition to any arrears in payment and the balance of the Monthly Lease Payments provided for herein, together with reasonable attorneys fees, less the net proceeds of disposition, if any, of the Financed Products; (c) accelerate all sums payable under this Agreement and any other agreements with Omnicell and require Customer to immediately pay Omnicell all sums that are already due and the discounted value, at the discount rate of six percent (6%) as of the date of default, of all Scheduled Payments that will be due under this Agreement, plus Omnicell's estimate at the time this Agreement was entered into of Omnicell's residual interest in the Financed Products reduced to present value at a discount rate of six percent (6%) as of the date of default, less the net proceeds of disposition, if any, of the Financed Products; and/or (d) exercise any other remedy available to Omnicell at law or equity, notice thereof being expressly waived by Customer. Any sums accelerated under this Section will be due and payable upon notice of acceleration and demand for payment and if not so paid, Omnicell may institute legal proceedings against Customer with Customer being responsible for said sums, court costs, and reasonable attorneys' fees incurred. Omnicell's rights hereunder will be cumulative. Customer agrees that all sums due under the calculations above will become immediately due and payable and are to be construed as liquidated damages rather than a penalty provision. Customer agrees that any delay or failure to enforce Omnicell's rights under this Agreement does not prevent Omnicell from enforcing any rights at a later time.

This document contains the Confidential Information of Omnicell, Inc.
Use or disclosure of this document without Omnicell's express written consent is prohibited.

SCHEDULE C

SOFTWARE LICENSE SCHEDULE

The terms contained in this Schedule C, together with the terms contained in the General Terms and Conditions, will govern the licensing of the Licensed Software by Omnicell to Customer. In the event of a conflict between this Schedule C and the General Terms and Conditions, the terms in Schedule C will take precedence.

1. LICENSE GRANT. Subject to the terms and conditions of this Agreement (including Customer's obligation to pay to Omnicell any and all amounts when due), Omnicell grants to Customer a limited, nonexclusive, fully paid up, **non-transferable**, **non-sublicensable license**, in object code form only, to use such Licensed Software for Customer's internal business operations at the designated Customer sites on the Delivered Products within which such Licensed Software is embedded and/or installed by such number of users and during such period of time as set forth on the applicable Pricing Supplement, or, where Omnicell has installed its server software on any Customer-provided servers. In no event will the term of any license to the Licensed Software exceed the period during which Customer owns or leases the applicable Delivered Products hardware (or any Customer-provided servers, if applicable). In no event may Customer (or its agents) use the Licensed Software on or in connection with any products or equipment other than the Delivered Products. In addition, Customer may: (a) use only the number of copies of the Licensed Software as identified in the Pricing Supplement; (b) use the product Documentation only in connection with such use of the Licensed Software; and (c) make only one (1) machine-readable copy of the Licensed Software, which copy may be used only for internal non-production purposes.

2. TITLE. Licensed Software is licensed, not sold. Title to and ownership of the Licensed Software, Documentation and Omnicell Confidential Information, as well as any and all adaptations, modifications or derivative works thereto and any and all Intellectual Property Rights therein or relating thereto, will at all times remain with and vest in Omnicell and its licensors. Nothing in this license shall be interpreted as conveying to Customer any rights in the Licensed Software or Documentation other than those granted in Section 1 above.

3. RESTRICTIONS. Customer agrees that it will not, and that it will not authorize or permit any third party to:

(a) sell, lease, transfer, license or sublicense any or all of the Licensed Software, Documentation and/or Omnicell Confidential Information or otherwise use any Licensed Software for the benefit of any sublicensee or third party;

(b) decompile, disassemble, re-program, analyze, reverse-engineer or create or attempt to create any derivative work or any other software based upon the Licensed Software or Documentation or any portion thereof; or

(c) provide, copy, transmit, disclose, divulge, or make available to, or permit use of the Licensed Software or Documentation by any third party or entity or machine (other than as expressly provided for herein) without Omnicell's prior written consent on a case by case basis, which may be granted or withheld in Omnicell's sole discretion.

4. OWNERSHIP OF DEVELOPMENTS TO OMNICELL'S LICENSED SOFTWARE. Customer irrevocably assigns to Omnicell all of its worldwide right, title and interest in and to any and all derivative works of the Licensed Software and Documentation, as well as any and all any inventions or other subject matter developed relating to the Licensed Software; and all Intellectual Property Rights in or relating to any of the foregoing. Customer agrees to perform all acts reasonably necessary to perfect the foregoing assignment and to enforce and defend the assigned Intellectual Property Rights. If any or all of the foregoing subject matter is not assignable for any reason, then Customer hereby grants to Omnicell a worldwide, perpetual, unrestricted, royalty-free, fully paid up, exclusive license, including the right to grant sublicenses, under all Intellectual Property Rights, to the non-assignable subject matter. If, as a matter of law, any of the foregoing is not assignable or licenseable to Omnicell as set forth above, Customer waives the enforcement against Omnicell of any Intellectual Property Rights with respect thereto.

5. LICENSED SOFTWARE AUDIT. For a period of the Term and three (3) years thereafter, or three (3) years from the time of creation of such a book, record or account, whichever is later, Customer will keep accurate books, records and accounts as are reasonably necessary to verify Customer's compliance with this Schedule as it pertains to the use of the Licensed Software, and will, upon reasonable notice, permit Omnicell or its representatives to inspect all such books, records and accounts and to make copies of or extracts from such books. Any on-site audit conducted pursuant to this Agreement will be performed during normal business hours. When available, access to Omnicell Delivered Products for purposes of audit may be gained remotely either by internet access or by dialing into Customer's network. Omnicell and Customer's IT staff hereby agree to cooperate in defining the applicable firewall access authorization requirements. The audit will be performed at Omnicell's expense; provided, that the total cost of such audit will be promptly paid by Customer if such audit reveals an underpayment by Customer of greater than five (5%) percent of the amount payable by Customer to Omnicell. Any unpaid amounts that are discovered will be promptly paid by Customer, together with interest as specified in Section 1.3 of the General Terms and Conditions (Payment Terms and Late Fees). Omnicell will minimize the disruption of Customer's normal business activities to the extent reasonably practicable.

This document contains the Confidential Information of Omnicell, Inc.
Use or disclosure of this document without Omnicell's express written consent is prohibited.

6. INITIAL INTERFACES. Omnicell agrees to provide to Customer the interfaces (as more fully described below) identified and for the fees set forth on an applicable Pricing Supplement.

(a) In-bound Interfaces. Interfaces which are "in-bound" to Omnicell will run on the Omnicell Delivered Products and will receive messages or records from the applicable Hospital Information System (**"HIS"**), such as ADT/Patient Management, Pharmacy or Materials Management. Omnicell is not responsible for (i) producing and transmitting interface messages or records from the HIS side of an interface; or (ii) development, installation, set-up, or testing of the HIS side of an interface. The Omnicell in-bound interface is only responsible for receiving HIS interface messages or records and processing them on the Delivered Products.

(b) Out-bound Interfaces. Interfaces which are "out-bound" from Omnicell will run on the Omnicell Delivered Products and will transmit messages or records to the applicable HIS. Omnicell is not responsible for (i) receiving and processing interface messages or records on the HIS side of an interface; or (ii) development, installation, set-up, or testing of the HIS side of an interface. The Omnicell out-bound interface is only responsible for transmitting HIS interface messages from the Delivered Products to the HIS.

(c) Interface Specifications. The format of the interface messages or records, and the communications mechanism will be mutually agreed upon by Omnicell, the HIS vendor and the Customer.

7. U.S. GOVERNMENT LICENSES. If Customer is acquiring the Licensed Software on behalf of any part of the United States Government, the Government acknowledges that the Licensed Software and accompanying Documentation were developed at private expense and are deemed to be 'commercial computer software' and 'commercial computer software documentation,' respectively, pursuant to DFAR Section 227.7202 and FAR 12.212(b), as applicable. Any use, modification, reproduction, release, performance, display or disclosure of the Licensed Software and/or the accompanying Documentation by the United States Government or any of its agencies is subject to the restrictions set forth in this Agreement and as provided in DFARS provisions: 227.7202-1(a); 227.7202-3(a); 252.227-7013(c)(1)(ii) and FAR provisions: 12.212(a); 52.227-19; 52.227-14, as applicable and will be prohibited except to the extent expressly permitted herein.

8. ARCHIVING AND BACKUP RESPONSIBILITIES. Customer will be solely responsible for "backing up" and archiving its data and data generated by Customer's internal use of the Licensed Software or Delivered Products on a regular basis in accordance with Customer's internal IT policies and the Omnicell Documentation.

This document contains the Confidential Information of Omnicell, Inc.
Use or disclosure of this document without Omnicell's express written consent is prohibited.

SCHEDULE D

SUPPORT SERVICES SCHEDULE

The terms contained in this Schedule D, together with the terms contained in the General Terms and Conditions, will govern the provision of Support Services by Omnicell to Customer for Delivered Products, the specific components of which are set forth herein and as identified in the Support Services Matrix for the applicable level of Support Services purchased by Customer for a particular Delivered Product as identified on the applicable Pricing Supplement. In the event of a conflict between this Schedule D and the General Terms and Conditions, the terms in this Schedule D will take precedence.

1. SUPPORT SERVICES.

1.1 Scope. Omnicell agrees to provide the support services described in this Section 1 that are indicated in the Support Services Matrix for the Omnicell Support Services plan level purchased by Customer as shown in the relevant Pricing Supplement. Such service obligations are for Omnicell to use commercially reasonable efforts to keep the Delivered Products in good working order such that the Delivered Products materially conform to the applicable Functional Specifications.

Each Pricing Supplement will indicate which Omnicell Support Services plan level, if any, is purchased for a Delivered Product. Next, the Support Services Matrix indicates which of the following services are available for that Delivered Product under the selected Omnicell Support Services plan level.

1.2 Telephone Support. During the Service Term, Omnicell will provide to Customer access to Omnicell's telephone hotline. Such access will allow Customer to report system problems and to seek telephonic assistance for use of the Delivered Products. Omnicell will provide such support in accordance with the Support Services Matrix for the applicable level of Support Services purchased by Customer for applicable Delivered Products, as set forth on an applicable Pricing Supplement. Upon receipt of a Support Call, Omnicell will respond in accordance with the standards for the Delivered Products as set forth in the Support Services Matrix for the applicable level of Support Services purchased by Customer on an applicable Pricing Supplement.

1.3 Remote Software & Interface Diagnostics. During the Service Term, Omnicell and Customer agree to enable those Delivered Products (identified in the Support Services Matrix as having Remote Software and Interface Diagnostics availability) and the Customer network such that Omnicell can provide to Customer remote diagnostic and software maintenance services.

1.4 On-Site Support. During the Service Term, when required Omnicell will provide to Customer on-site visits by its support personnel to resolve those problems unable to be resolved via Telephone Support or Remote Software & Interface Diagnostics, in accordance with the On-Site Support obligations and standards set forth in the Support Services Matrix for the applicable level of Support Services purchased by Customer for such Delivered Products on an applicable Pricing Supplement. Upon determination that On-Site Coverage is required, Omnicell will respond in accordance with the On-Site response time standards for the Delivered Products as set forth in the Support Services Matrix for the applicable level of Support Services purchased by Customer on an applicable Pricing Supplement.

1.5 Repair/Replacement Parts. If any Delivered Product fails for any reason, Customer agrees to immediately advise Omnicell of the failure, specifying type, serial number and location of the Delivered Product, the nature of the failure and any known cause. Omnicell will make adjustments to and replace component parts of the Delivered Products as Omnicell reasonably deems necessary. If Omnicell is unable to repair an item of Delivered Products, Omnicell will replace such item at Omnicell's discretion. Replacement parts will be furnished to Customer on an exchange basis and in accordance with Omnicell's RMA Policy (available upon request). Customer acknowledges that exchanged parts are the property of Omnicell. In the event such exchanged parts are not returned within fifteen (15) business days of replacement or repair, Omnicell will have the right to invoice Customer Omnicell's US list price for such exchanged part. To the extent that Customer wishes to make any repairs or adjustments to the Delivered Product, such repair or adjustment requires Omnicell's prior written consent on a case-by-case basis, and in all cases, must be performed by an individual specifically trained in the application and repair of the Delivered Products. Parts required hereunder for repairs will be available from Omnicell's parts distribution network and delivered to Customer's site in accordance with the timeframes indicated in the Support Services Matrix for the applicable level of Support Services purchased by Customer, as indicated on the applicable Pricing Supplement.

1.6 Software Updates and Upgrades. During the Service Term, Omnicell will notify Customer if and when Updates and/or Upgrades have become generally available to other similarly situated Omnicell customers. Omnicell will mutually schedule with Customer the installation of such Update and/or Upgrade for the applicable Delivered Product. Customer acknowledges and agrees that not all Delivered Products will be subject to Updates and/or Upgrades, and Customer may refer to the Support Services Matrix for information regarding which Delivered Products are upgradeable and/or updatable.

1.7 Uptime Commitment. Customer acknowledges and agrees that not all Delivered Products are subject to an uptime commitment and Customer may refer to the Support Services Matrix for information regarding which Delivered Products are subject to an uptime commitment. For any Delivered Product that is subject to an uptime commitment, Omnicell will commit to the cumulative up-time percentage so identified in the Support Services Matrix. Such cumulative up-time percentage will be measured by Omnicell's Support Services department. An uptime report will be provided from the Support Service representative upon Customer's request.

This document contains the Confidential Information of Omnicell, Inc.
Use or disclosure of this document without Omnicell's express written consent is prohibited.

1.8 "Shared" Service Plan Levels Only: Additional Omnicell Support Services. *For those Delivered Products wherein Shared Service is an option and are identified as under a "Shared" Service level plan in the applicable Pricing Supplement, Omnicell will support a Delivered Products maintenance partnership with Customer. The objective of this partnership is to foster an environment that aids Customer in cost-effectively maintaining the Delivered Products with Omnicell's assistance and cooperation and promotes service efficiency. In turn, provided Customer meets its shared obligations, it receives a discount to the support fees otherwise associated with "Gold" service level plans for such Delivered Products. Omnicell's portions of the "Shared" obligations are set forth below, and Customer's portions of the "Shared" obligations are set forth in Section 1.8(f) below.*

(a) Shared Service Fees. Provided Customer meets and continues to meet its obligations relating to Shared Service plan levels set forth herein (including handling first response Customer support calls), Customer's Monthly Support Fee indicated on the applicable Pricing Supplement will reflect special pricing adjustments. Such pricing adjustments will be effective only after designated technicians from Customer's biomedical or IT department, as may be applicable (the **"Department"**) have successfully completed Omnicell's Shared Service training. Such pricing adjustments will continue to apply for so long as Customer maintains trained personnel in the Department(s). Omnicell reserves the right to apply Shared Services pricing adjustments upon successful completion of the training program and suspend adjustments during periods where primary coverage is not provided.

(b) Service Training. Omnicell will provide certified Shared Service training for Customer's designated technicians from the Department at Omnicell's corporate training site. The training will be designed to allow the Department technicians to troubleshoot and repair hardware issues on the Delivered Products and to provide first response to Customer service calls, as well as additional support to be mutually agreed by the Parties. A certificate of training completion will be provided upon satisfactory completion of the course and demonstrated proficiency by the Department staff. The cost of the class per person, including tuition, books and materials, is set forth in the applicable Pricing Supplement. Customer is responsible for travel and other related expenses incurred by the Department staff in connection with Shared Service training. Lists of the specific skills/tasks that will be covered in the Shared Services training class are available upon request.

(c) Product Documentation. Omnicell will provide technical service documentation at the Shared Service training sessions. User manuals are included with the Delivered Products upon shipment.

(d) Parts Availability. A reasonable stock of the critical service parts and components, as determined by Omnicell, will be maintained by Omnicell on a regional basis. All other parts required by Customer for repairs will be available from Omnicell's parts distribution network and delivered to Customer's site in accordance with the time frames indicated in the Support Services Matrix for the applicable level of Support Services purchased by Customer on the applicable Pricing Supplement. Customer may purchase additional replacement parts, components and subassemblies for storage at Customer's site. In accordance with the Support Services Matrix, Omnicell will replace parts, components and subassemblies as they are used in the repair of the Delivered Products; provided that Customer follows Omnicell's RMA Policy.

(e) Escalation / Service Call Protocol. Omnicell telephone and on-site support resources identified in this Section 1.8 are available as set forth in the Support Services Matrix to Customer under Shared Service levels if no progress has been made in restoring the Delivered Products to normal operation by the Customer after the Department has made reasonable efforts to resolve. Omnicell will determine the optimal deployment and utilization of these resources. The service protocol will be:

(i) Customer will respond to all hardware related service calls for Support Service.

(ii) In the event Omnicell is contacted directly by the user Department, Omnicell will refer the user to the Department and contact the Department directly to provide the specifics of the service requested.

(iii) Omnicell's service personnel will notify the Department when arriving in the user Department.

(iv) Omnicell's service engineer will keep the Department updated with current repair status. Upon completion of repairs performed outside the standard work hours, the service engineer will report the status of the Delivered Products to the Department. Service records for all such calls will be made available to Customer upon request.

(f) Customer Responsibilities. For those Delivered Products identified as under a Shared Service level plan in the applicable Pricing Supplement, Customer's portions of the "Shared" obligations are set forth below.

(i) Attendance at Shared Service Training. Customer agrees to designate at least one member from the Department to attend Omnicell's Shared Services training course. Shared Services training must be successfully completed within ninety (90) days of the installation (or delivery where Omnicell installation is not required) of the Delivered Products or initiation of Support Services.

(ii) Maintain "Certified" Personnel. Customer is responsible for maintaining an adequate staff of qualified Department personnel who have completed and been successfully certified at the Shared Services training course, including retraining and/or replacing personnel leaving the Department, to reasonably handle Customer calls and preventive maintenance obligations set forth below.

(iii) First Call Response. Once trained, the Department will be responsible for handling all hardware related first call Customer service calls for the Delivered Products, and adhering to the escalation protocols set forth in Section 1.8(e) of this Schedule D. Lists of the specific tasks and responsibilities which the Customer will be expected to handle are available upon request.

This document contains the Confidential Information of Omnicell, Inc.
Use or disclosure of this document without Omnicell's express written consent is prohibited.

2. PROVISION OF SUPPORT SERVICES.

2.1 Level of Effort. Omnicell will use commercially reasonable efforts commensurate with the then applicable industry standards to provide the Support Services in a professional and workmanlike manner, but Omnicell does not guarantee that every question or problem raised by Customer will be resolved.

2.2 Telephone Support Response Times. Upon receipt of a Support Call, Omnicell will respond in accordance with the Response Times set forth in the Support Services Matrix for the applicable level of Support Services purchased by Customer on an applicable Pricing Supplement. All Response Times are during Standard Support Hours only. If Customer is not available, Omnicell will not be liable for adhering to the above Response Times. At no time does Omnicell guarantee a "fix" during a Response Time.

2.3 Supported Delivered Products. Support Services will be provided only for the Delivered Products that are covered under a then-valid Pricing Supplement for Support Services.

2.4 Non Standard Support. With respect to support services required that are not specified herein, or are excluded pursuant to Section 2.5 (Specific Exclusions) below, or are due to misapplication, abuse, misuse, alteration or unauthorized repair or installation of the Delivered Products, lack of clean commercial power or environmental conditions causing malfunctions, including power surges, or support of products not manufactured by Omnicell (**"Non Standard Support"**), Omnicell will charge Customer for such Non Standard Support at Omnicell's then current rates plus the list price for any replacement parts, if any. In addition, Customer will reimburse Omnicell for all related reasonable travel expenses and costs for board and lodging related to on-site Non Standard Support. Where Support Services can be provided remotely, but Customer does not permit Omnicell to access the Delivered Products remotely, Omnicell reserves the right to designate support for any such Delivered Products as Non Standard Support hereunder.

2.5 Specific Exclusions. Support Services under an applicable Support Service Plan do not include services requested as a result of causes or errors that are not attributable to Omnicell or are not reproducible. In the event that Customer requests Omnicell to provide, and Omnicell does so provide, any services in connection with causes or errors which are not attributable to Omnicell or are not reproducible, such support will be subject to the Non-Standard Support terms in Section 2.4 (Non Standard Support) above. Causes or errors that are not attributable to Omnicell include the following:

(a) negligent use, Force Majeure or causes other than through ordinary use;

(b) use of the Delivered Products not in accordance with the Documentation, or on or with hardware, software or other equipment that deviates from Omnicell or manufacturer operating specifications;

(c) attempted modification or addition to the Delivered Products undertaken by any party other than Omnicell;

(d) Customer/third party products and/or software not supplied by Omnicell;

(e) Customer's failure to implement a supported version of the Licensed Software that is issued under this Schedule D;

(f) Additional, modified or replacement interfaces not included in the initial installation (which may include but are not limited to (i) change in record format; (ii) change in communications mechanism; (iii) addition of new record types; and/or, (iv) addition of new processing functionality. Replacement interfaces will include any replacement to an existing interface between the Delivered Products and Customer's HIS); or

(g) failure by Customer to respond to any action plans provided by Omnicell pursuant to a Customer Support Call.

2.6 Customer Provided Products. Omnicell recommends that Customer install Omnicell supplied integrated hardware and software platforms for optimum performance, reliability and serviceability. Should Customer decide to install its own computing platforms, Omnicell may provide a special "customer provided server" option which covers software support under this Support Services Schedule. Products not manufactured by Omnicell and hardware platforms purchased independently by the Customer are not the responsibility of Omnicell and will not be covered under this Schedule D. Any computing hardware provided by Customer must meet the hardware specifications set forth by Omnicell and Customer must be capable of supporting such hardware. Notwithstanding the above, in the event Customer so chooses, in lieu of Omnicell supplied computing hardware, virtual environments whose resources are provisioned by Customer and meet the required applicable technical specifications and documentation of Omnicell are also deemed sufficient for optimal performance, reliability and serviceability of Omnicell's Delivered Products.

2.7 Subcontracting. Omnicell may engage the services of sub-contractors to perform any of its duties of Support Services. However, unless otherwise agreed in writing, no sub-contracting of such duties will relieve Omnicell of its responsibilities hereunder.

3. CUSTOMER RESPONSIBILITIES.

3.1 Procedures. Customer will train its personnel in the proper use of the Delivered Products. Customer will maintain a current back-up copy of the Licensed Software and a list of all programs, data and licenses required for the performance of Support Services, including implementing back-up procedures in the event of an error or malfunction in the Licensed Software or Delivered Products upon which the Licensed Software is loaded or operating. Unless required to be returned in accordance with Omnicell's RMA Policy, Customer is responsible for properly and safely disposing all disposable items related to or in use with the Delivered

This document contains the Confidential Information of Omnicell, Inc.
Use or disclosure of this document without Omnicell's express written consent is prohibited.

Products, including but not limited to expired batteries for applicable Delivered Products.

3.2 **Reporting.** Customer will document and promptly report all errors or malfunctions of the Delivered Products to Omnicell. Omnicell will provide Customer with a service ticket number that Customer will use to track the status of each issue. Customer will take all steps necessary to carry out any procedures Omnicell may give for the rectification of errors or malfunctions within a reasonable time after such procedures have been provided. Omnicell reserves the right to close the service ticket without further responsibility or liability if Customer does not provide appropriate feedback to Omnicell within thirty (30) days of receiving new Delivered Products or a workaround for a problem, or if Customer otherwise fails to respond to a request for additional information.

3.3 **Access.** Customer will provide Omnicell with access to Customer's personnel and equipment during Support Hours to facilitate Support Services requests. Customer acknowledges that dial-in and/or remote access will speed up resolution of support issues.

3.4 **Third Party Agents.** If Customer utilizes third party support services or products to support the Delivered Products, Customer will ensure such third party support is at a similar or higher level of support as Customer would otherwise have secured with Omnicell. Customer acknowledges and agrees that Omnicell will not be held responsible for delayed Response Times and Support Services should information from third party support be unavailable or delayed.

3.5 **Customer Contacts.** Customer will appoint one or more qualified and trained System Administrators who are knowledgeable in the operation of the Delivered Products to serve as primary Customer contacts with Omnicell for Support Calls. Customer agrees that it will use its best efforts to ensure that all Support Calls will be initiated through such System Administrators.

4. TERM AND RENEWAL. Support Services will be provided for the period set forth in the applicable Pricing Supplement. At least sixty (60) days prior to the expiration of the applicable Service Term, Omnicell will provide written notice to Customer of the expiration of that Service Term. Notwithstanding the foregoing, either Party may provide the other Party at least thirty (30) days advanced written notice of its intention not to renew the then-current Service Term. In case of renewal, all provisions of this Schedule D will remain in full force and effect. Should Customer elect not to obtain or renew its Support Services as provided under this Section 4 and thereafter following a lapse in time subsequently request reinstatement of Support Services, Omnicell will only be obligated to reinstate such Support Services after the Delivered Product has undergone a "wellness check" by a Support Services technician (with such time to be invoiced at the then current time and materials rates) and Customer pays Omnicell the then-current monthly fee plus all cumulative Monthly Support Fees that would have been payable had Customer not allowed a lapse in its Support Services.

5. GENERAL DEFINITIONS.

5.1 **"Disabled System"** means the Omnicell system and its Delivered Products are unavailable for clinical use.

5.2 **"Non-Critical Failure"** means any other non operational support state other than a Disabled System.

5.3 **"Non Standard Support"** will have the meaning set forth in Section 2.4 of this Schedule D.

5.4 **"Response Time"** means the elapsed time between the Omnicell's receipt of a Support Call and the target time within which Omnicell will respond to the Customer.

5.5 **"Service Term"** means the period for which Customer has purchased, and remains current in the payment of all Scheduled Payments and otherwise remains in compliance with the requirements in this Schedule D, for the Support Services indicated in the relevant Pricing Supplement, including all contracted renewal periods as provided in the Support Services Matrix.

5.6 **"Standard Support Hours"** means Omnicell's standard hours of support as identified in the Support Services Matrix for the applicable level of Support Services purchased by Customer for a particular Delivered Product as identified on the applicable Pricing Supplement.

5.7 **"Support Call"** means a call by Customer seeking Support Services pursuant to this Schedule D.

5.8 **"Support Services"** means the provision by Omnicell of the services set forth in this Schedule D.

5.9 **"Support Services Matrix"** means the table set forth at the end of this Schedule D.

5.10 **"Update"** means a version of the Licensed Software containing error corrections or bug fixes, but does not generally include functional enhancements.

5.11 **"Upgrade"** means a version of the Licensed Software containing functional enhancements, modifications or extensions. An Upgrade does not include hardware changes needed to accommodate new releases, nor does it include options or new products for which Omnicell charges customers additional fees.

This document contains the Confidential Information of Omnicell, Inc.
Use or disclosure of this document without Omnicell's express written consent is prohibited.

Omnicell Support Services Matrix				
Omnicell Service Plan Levels[1]	**Pharmacy & Supply Systems: *GOLD***	**Pharmacy & Supply Systems: *SHARED[2]***	**Mobile Medication Systems: *GOLD***	**Mobile Medication Systems: *SHARED[2]***
Telephone Support	See Coverages and Response Times below:			
Coverage	24 Hours/Day - 7 Days/Week			
Engineer Live Coverage	Monday-Friday: 24 Hours Saturday, Sunday, Holidays: 6AM – 6PM CST			
On-Call Support	Saturday, Sunday, Holidays: 6PM – 6AM CST			
Response Times: (Maximum)	30 Minutes: Monday-Friday 6AM – 6PM CST 2 Hours: Monday-Friday 6PM – 6AM CST & Saturday-Sunday & Holidays			
Remote Software & Interface Diagnostics	Included* ** Proactive Remote Available via Secure Server*	Included* **Proactive Remote Available via Secure Server*	Included* **Proactive Remote Available via Secure Server*	Included* **Proactive Remote Available via Secure Server*
On-Site Support	See Coverages and Response Times below:			
On-Site Coverage (if necessary)	24 Hours/Day - 7 Days/Week (Subject to On-Site Response Times below)			
On-Site Response Time: (Maximum)	Based on Status of System – See "Disabled System" vs "Non-Critical Failure" below			
Disabled System (See Section 5.1)	6 Hours	6 Hours* **First Response By Customer Mandatory; Omnicell Dispatch incurs Time/Labor Charges*	24 Hours	5 Business Days* ** First Response By Customer Mandatory; Omnicell Dispatch incurs Time/Labor Charges and Time and Materials Billed*
Non-Critical Failure (See Section 5.2)	24 Hours	24 Hours* **First Response By Customer Mandatory; Dispatch incurs Time/Labor Charges*	24 Hours	5 Business Days* ** First Response By Customer Mandatory; Dispatch incurs Time/Labor Charges and Time and Materials Billed*
Repair/Replacement Parts	Included* **On-site in 24-hours from Omnicell technician determination of need.*	Included	Included* **On-site in 24-hours from Omnicell technician determination of need; Not including new Batteries and consumable items such as keyboard skins*	Included* **Not including new Batteries and consumable items such as keyboard skins*
Software Updates & Upgrades	Included	Included	Included for specific models of carts only	Included for specific models of carts only
Uptime Commitment	96%	N/A	N/A	N/A
Service Term Available	12 months* **Renewable so long as Master Agreement in effect or until EOS of product*	12 months* **Renewable so long as Master Agreement in effect or until EOS of product*	12 months* **Maximum term of 5 years, so long as Master Agreement in effect or until EOS of product*	12 months* **Maximum term of 5 years, so long as Master Agreement in effect or until EOS of product*

1 The details of the Omnicell Service Plans listed above are effective as of the Effective Date of the Master Agreement. The actual details applicable to a Pricing Supplement are those in effect as of each anniversary of a Pricing Supplement.

2 Shared Service not available on all Delivered Products.

This document contains the Confidential Information of Omnicell, Inc.
Use or disclosure of this document without Omnicell's express written consent is prohibited.

CORPORATE MASTER AGREEMENT

SCHEDULE E

TAX SCHEDULE

Customer Name **State Of Nevada Department Of Administration, Purchasing Division**

Federal Employer Identification Number _____

City _____ **County** _____ **State** _____

❖ **Exemption Status**:

Indicate the Customer's sales/use tax status by placing a mark next to the applicable statement:

Subject to vendor collection of sales/use taxes on acquisition of medical equipment	
Exempt from vendor collection of sales/use taxes on acquisition of medical equipment	
Subject to vendor collection of property taxes on acquisition of medical equipment	
Exempt from vendor collection of property taxes on acquisition of medical equipment	
Subject to vendor collection of other taxes on acquisition of medical equipment	
Exempt from vendor collection of other taxes on acquisition of medical equipment	

❖ **Exemption Type, State Exemption Number and Expiration Date:**

If exempt, indicate the exemption type by placing a mark next to the applicable exemption, and, if applicable, enter the state issued exemption number and expiration date.

Federal Hospital	
State, County, City or District Hospital	
University Hospital	
Non-Profit Hospital (Charitable)	
Non-Profit Hospital (Non-Charitable)	
Other Hospital Type	
Direct Pay Permit	
Other (_____)	

State Exemption Number _____ Expiration Date _____

Direct Pay Permit Number _____ Expiration Date _____

❖ **Signature and Contact Information**:

_____ _____

Signature Date

_____ _____

Name and Title Phone Number

❖ **Submission Information**:

Fax this form to Omnicell Sales Support/Tax Department at 650-251-6240.

If exempt, include a copy of state required exemption documentation.

This document contains the Confidential Information of Omnicell, Inc.
Use or disclosure of this document without Omnicell's express written consent is prohibited.

SCHEDULE F

PROFESSIONAL SERVICES SCHEDULE

The terms contained in this Schedule F, together with the terms contained in the General Terms and Conditions, will govern the provision of certain consulting, hosting and/or other services by Omnicell to Customer. In the event of a conflict between this Schedule F and the General Terms and Conditions, the terms in Schedule F will take precedence.

1. PROFESSIONAL SERVICES.

1.1 Overview. Omnicell will provide such resources and utilize such employees and/or consultants as it deems necessary to perform the Professional Services. The manner and means used by Omnicell to perform the Professional Services desired by the Customer are in the sole discretion and control of Omnicell.

1.2 Customer Obligations. Customer agrees to provide Omnicell with any required Customer Technology, at no cost to Omnicell, unless otherwise stated elsewhere in this Agreement or, if applicable, in an applicable Statement of Work. If achievement of any particular milestone is dependent upon performance of tasks by Customer or by a third party outside Omnicell's control, the projected dates for accomplishing such milestones will be approximately adjusted to reflect any changes in such tasks or the Professional Service Schedule.

1.3 Schedule. Omnicell will use commercially reasonable efforts to provide the Professional Services in a timely manner, and Customer agrees to cooperate in good faith to allow Omnicell to achieve completion of such Professional Services in a timely and professional manner. Customer understands and agrees that Omnicell's provision of such Professional Services may depend on completion of certain Customer tasks or adherence to Customer schedules within Customer's control; consequently, the Professional Services Schedule, time of performance and Professional Services may require adjustments or changes in the event such Customer tasks or schedules change, are modified or are not completed as anticipated.

1.4 Segmentation. Unless otherwise expressly set forth in this Agreement, a signed writing between the Parties or, as applicable, a Statement of Work, Omnicell is not providing to Customer any Omnicell Delivered Products pursuant to this Schedule F. In the event Omnicell provides such Delivered Products, they will be deemed provided only under the General Terms and Conditions of this Agreement and Schedules A-D, respectively, for the provision of those Delivered Products.

1.5 Statements of Work. In the event a Statement of Work is required for non-standard Professional Services, Omnicell will provide to Customer the Professional Services that are described in one or more applicable Statements of Work pursuant to the terms and conditions of this Schedule F. Such Statement of Work may be amended or modified by supplementary Statements of Work agreed to in writing by both Parties hereto and attached to the Statement of Work, and thereafter, the Professional Services will be deemed to include the services described in such supplementary Statements of Work.

2. PROFESSIONAL SERVICES FEES AND EXPENSES.

2.1 Fees and Expenses. Customer agrees to pay Omnicell the fees set forth in an applicable Pricing Supplement or Statement of Work, as applicable. Customer also will reimburse Omnicell for actual, reasonable travel and out-of-pocket expenses incurred for any Professional Services that must be performed away from Omnicell facilities, or that are otherwise identified as being chargeable in an applicable Pricing Supplement or Statement of Work, as applicable.

2.2 Milestone Payments. In the event milestone payments are mutually agreed to by the Parties as to the performance of Professional Services as based upon certain milestone events, achievement of such milestone events by Omnicell will thereby trigger the obligation by Customer to pay the applicable Milestone Payment as listed in the Payment Schedule. Upon achievement of the milestone, Omnicell will provide to Customer a statement showing achievement of the milestone and an invoice for the amount of the applicable Milestone Payment.

3. INTELLECTUAL PROPERTY RIGHTS.

3.1 License to Customer. Subject to Customer's continued compliance with the terms and conditions in this Schedule F, Omnicell grants to Customer a worldwide, non-exclusive, non-transferable, perpetual, fully paid license under the Omnicell Intellectual Property Rights for the sole purpose of using the Deliverables in connection with its internal business operations. Customer will have no rights to sublicense to third parties the rights granted hereunder except as necessary to allow Customer to carry out its internal business operations.

3.2 Customer Technology. Customer Technology, to the extent known, will be identified in advance to Omnicell. Customer hereby grants Omnicell a royalty-free, non-exclusive, world-wide license under Customer's Intellectual Property Rights to use the Customer Technology for the sole purpose of enabling Omnicell to perform the Professional Services and develop or prepare any Deliverables for Customer.

3.3 Reservation of Rights. Except as otherwise set forth herein, neither this Schedule F, nor the provision of Professional Services hereunder, will give either Omnicell or Customer any ownership interest in or rights to the

This document contains the Confidential Information of Omnicell, Inc.
Use or disclosure of this document without Omnicell's express written consent is prohibited.

Intellectual Property Rights of the other party. All Intellectual Property Rights that are owned or controlled by a party at the commencement of this Schedule F will remain under the ownership or control of such party throughout the term of this Schedule F and thereafter.

3.4 Ownership of Deliverables and Innovations. Omnicell will own all Intellectual Property Rights in any and all Deliverables and Innovations.

3.5 Assignment of Intellectual Property Rights. Customer irrevocably assigns to Omnicell all of its worldwide right, title and interest in and to any Deliverables and all derivative works of any Deliverables and any Innovations or other subject matter developed in performing Professional Services for Customer; and all Intellectual Property Rights relating to any of the foregoing. Customer agrees to perform all acts reasonably necessary to perfect the foregoing assignment. Customer agrees to perform all acts reasonably necessary to enforce and defend the assigned Intellectual Property Rights, subject to payment by Omnicell of all costs reasonably incurred by Customer which are associated therewith. If any or all of the foregoing subject matter is not assignable for any reason, then Customer hereby grants to Omnicell a worldwide, perpetual, unrestricted, royalty-free, fully paid up, exclusive license, including the right to grant sublicenses, make copies and derivative works, under all Intellectual Property Rights to the non-assignable subject matter.

4. LIMITED WARRANTIES AND EXCEPTIONS.

4.1 Warranty by Omnicell. Omnicell warrants that the Professional Services provided hereunder will be performed in a professional manner consistent with the then applicable industry standards of quality applicable to the performance of services for similar types of engagements. In order to receive warranty remedies, deficiencies in the Professional Services and/or Deliverables must be reported to Omnicell in writing within thirty (30) days from Omnicell's performance of the Professional Services at issue or the delivery of a Deliverable, as applicable. Any additions, deletions or modifications to the Deliverables, except as specifically set forth in the Omnicell documentation or as authorized in writing by Omnicell will cause immediate termination of any applicable warranty as established above. Customer's sole remedy will be to have the applicable Professional Services re-performed.

4.2 Warranty by Customer. Customer represents that to the extent Customer provides to Omnicell any Customer Technology or third party technology or materials in connection with any Professional Services, Customer has obtained all necessary permissions, licenses, consents and has the authority to provide such technology and materials to Omnicell.

4.3 Warranty Disclaimer. THE WARRANTY ABOVE IS EXCLUSIVE AND IN LIEU OF ALL OTHER WARRANTIES, WHETHER EXPRESS, IMPLIED, OR STATUTORY, INCLUDING, WITH REGARD TO THE SERVICES OR ANY DELIVERABLES, THE IMPLIED WARRANTIES OF TITLE, MERCHANTABILITY, FITNESS FOR A PARTICULAR PURPOSE OR NON-INFRINGEMENT, WHICH ARE EXPRESSLY DISCLAIMED TO THE FULLEST EXTENT PERMISSIBLE BY LAW. In addition, Omnicell disclaims any warranty as to the accuracy of any report, data or other material or other technology, data, specifications, or designs (collectively, **"Reports"**) delivered to Customer or any third party to the extent such Reports incorporate or are based on or rely upon any Customer or any third party data or materials.

5. THIRD PARTY CLAIM INDEMNIFICATION FOR CUSTOMER'S MEDICAL DECISIONS. Customer acknowledges that Omnicell provides no advice with respect to medical decisions relating to any patients, notwithstanding any Professional Services provided hereunder. Customer remains solely responsible for all medical decisions and is responsible for ensuring that it assigns knowledgeable health care personnel to work with Omnicell in connection with any Professional Services and/or the implementation of any recommendations that may be contained within any Deliverables to ensure that all appropriate medical decisions are made with respect to any patients. Customer will defend, indemnify and hold Omnicell harmless from any claims relating to any medical decisions made or not made with respect to any of Customer's patients.

6. NO RESTRICTIONS ON PROFESSIONAL SERVICE OFFERINGS. Nothing in this Schedule F will limit either party's right to independently develop information, materials, technology or other products or services for itself or for others which may compete with the other party or which may be similar to the Confidential Information, as the case may be, so long as no unauthorized disclosures or uses of the Confidential Information have been made by the party during the Term of this Agreement. Subject to the limitations in this Section 6, Omnicell may in its sole discretion develop, use, market, license, offer for sale, or sell any product or service that is similar or related to that which was developed for or provided to Customer by Omnicell hereunder.

7. EFFECT OF TERMINATION; PAYMENT UPON TERMINATION.

7.1 Effect of Termination. Upon termination of this Schedule F for any reason, Omnicell may discontinue any Professional Services. In the event payment for any Professional Services or Deliverables remains outstanding, Customer will return any such Deliverables, including all copies, and Customer's right to use such Deliverables will cease. Within ten (10) days following termination, Customer will certify in writing to the other that all originals, copies and extracts of any Confidential Information of the other Party, in whole or in part, in any form, have either been returned to the disclosing Party or destroyed in accordance with the disclosing Party's specific instructions.

This document contains the Confidential Information of Omnicell, Inc.
Use or disclosure of this document without Omnicell's express written consent is prohibited.

7.2 Payment upon Termination. Within thirty (30) days of termination of this Schedule F for any reason, Omnicell will submit to Customer an itemized invoice for any fees or expenses accrued and unpaid under this Schedule F prior to the date of such termination, and Customer will pay such invoice pursuant to Section 1.3 of the General Terms and Conditions (Payment Terms and Late Fees) unless otherwise agreed to in a signed writing between the Parties or an applicable Statement of Work.

8. GENERAL DEFINITIONS.

8.1 "Customer Technology" means the materials and technology owned or controlled by Customer which Omnicell reasonably requires to perform the Professional Services.

8.2 "Deliverables" means the materials, devices, products or other deliverables that are provided by Omnicell to Customer as a result of performing Professional Services.

8.3 "Innovations" means any invention, development or innovation conceived or developed by Omnicell solely or jointly with Customer in the performance of the Professional Services and whether or not forming part of a Deliverable, including, but not limited to programs and their documentation, works of authorship and improvements, designs and artwork, design flows, processes, databases, algorithms, methods, libraries, computer languages, encoding techniques, articles, writings, compositions and models.

8.4 "Milestone Payments" means the milestone payments, if any, that may be set forth in the Statement of Work, as applicable.

8.5 "Payment Schedule" means the payment schedule for such Professional Services for the provision of such Professional Services.

8.6 "Professional Services" means the consultative services provided by Omnicell to Customer.

8.7 "Professional Service Schedule" means the timetable relating to the performance of the Professional Services.

8.8 "Statement of Work" means, in the event a Professional Service necessitates a mutually agreed upon schedule and description of non-standard Professional Services and Deliverables, such schedule and description of such non-standard Professional Services will be provided in writing from time to time, which may include single or multiple Statements of Work.

This document contains the Confidential Information of Omnicell, Inc.
Use or disclosure of this document without Omnicell's express written consent is prohibited.

SCHEDULE G

PREFERRED RELATIONSHIP TERMS AND CONDITIONS

For purposes of this Schedule G, the following terms and conditions shall apply to the Preferred Relationship between the Parties. Otherwise, all other defined terms shall be as provided for within the General Transactional Terms and Conditions as well as Schedules A-F, respectively, of this Agreement.

1. PREFERRED RELATIONSHIP.

1.1 Company Commitment. Company hereby identifies Omnicell as its Sole Source Provider for the Product Categories selected in Schedule J. As such, Company agrees to ensure that its Participating Customer Members comply with the commitments of this Preferred Relationship.

1.2 Sole Source Provider to Participating Customer Members. Upon the date Company executes this Agreement on behalf of all Participating Customer Members, Omnicell agrees to provide such Participating Customer Member with the Preferred Pricing as provided for within Schedule H herein in consideration of such Participating Customer Members utilizing Omnicell as its Sole Source Provider, as defined in Section 4.5 below. Furthermore, Company hereby agrees that any new hospital, clinic or the like facility wherein Company has purchased a majority interest share in such facility shall be added to this Agreement in writing within thirty (30) days of such acquisition and at which time such facility shall be held to the Sole Source Provider commitment and shall in turn be entitled to the benefits of this Agreement.

1.3 Participating Customer Members. Company represents and warrants that the Participating Customer Members are members of Company and as such each such Participating Customer Member has the right to purchase and/or or lease the Omnicell Products pursuant to this Agreement. In addition, Company represents and warrants that it has the legal right and hereby does contractually bind its Participating Customer Members to the terms and conditions of this Agreement. As such, each Participating Customer Member's transactions for the Omnicell Products and Support Services shall be governed by this Agreement, specifically, the General Transactional Terms and Conditions along with Schedules A-F, respectively, as executed by Company on behalf of its Participating Customer Members. Furthermore, in the event Company or a Participating Customer Member is a member of more than one group purchasing organization ("**GPO**"), Company hereby agrees to indemnify Omnicell in the event that any purchase and/or lease by a Participating Customer Member gives rise to a further obligation by Omnicell to pay administrative fees to any more than one Company designated GPO or other such similar entity on behalf of Company and its Participating Customer Members based upon its transactions with Omnicell.

1.4 Audit for Compliance. For a period of the Preferred Relationship Term and three (3) years thereafter, Company shall keep accurate books, records and accounts as are reasonably necessary to verify Company's compliance with this Preferred Relationship, respectively, and shall, upon reasonable notice, permit Omnicell or its representatives to inspect all such books, records and accounts and to make copies of or extracts from such books.

2. TERM AND TERMINATION OF THE PREFERRED RELATIONSHIP.

2.1 Term for the Preferred Relationship. This Preferred Relationship as is reflected in Schedules G-J, respectively, shall become effective on the Effective Date and shall continue in full force and effect for a period of five (5) years, unless otherwise terminated as provided herein (the **"Preferred Relationship Term"**).

2.2 Termination for Cause of the Preferred Relationship. Either Party may, by written notice to the other Party, terminate this Preferred Relationship if either of the following events occurs:

(a) A Party is in material breach of any non-monetary term, condition or provision of this Agreement, which breach is not cured within thirty (30) days after the non-breaching Party gives the breaching Party written notice of such breach; or

(b) The other Party (i) terminates or suspends substantially all of its business activities, (ii) becomes insolvent, admits in writing its inability to pay its debts as they mature, makes an assignment for the benefit of creditors, or becomes subject to direct control of a trustee, receiver or similar authority, or (iii) becomes subject to any bankruptcy or insolvency proceeding under federal or state statutes which are not rescinded within sixty (60) days.

2.3 Effect of Termination. Upon termination of this Preferred Relationship for any reason, both Parties shall immediately discontinue use of the other Party's Confidential Information. In the event this Preferred Relationship expires or terminates as provided for in this Section 2, such termination will in no event terminate any leases or purchases executed pursuant to an applicable Pricing Supplement under the terms and conditions of the General Transactional Terms and Conditions and Schedules A-F, respectively, of this Agreement prior to the date of termination of this Preferred Relationship.

3. REMEDIES. If, during the term of this Preferred Relationship, Company or its Participating Customer Members purchase or lease products that are of the same type as the products described in any selected Omnicell Product Category from another vendor other than Omnicell (except as explicitly permitted herein), Omnicell will be

This document contains the Confidential Information of Omnicell, Inc.
Use or disclosure of this document is prohibited without Omnicell's express written consent.

entitled to (1) retroactively receive payment in the amount equal to the difference between the discounted sale price and the then current US List price that would have been applied for the products purchased to date; (2) accelerate any and all amounts then due and owing from Company or its Participating Customer Members; and (3) charge Company or its Participating Customer Members Omnicell's then current US List price or GPO price, whichever is applicable, for any Omnicell Products provided at the discounts contemplated hereunder. The foregoing remedy shall be in addition to and shall not limit any other remedies Omnicell may have at law or in equity.

4. GENERAL DEFINITIONS.

4.1 "Omnicell Products" means the Omnicell system equipment within the Product Categories as selected within Schedule J made available as of the Effective Date, or as added from time to time via amendment, for sale, lease or license to Company and its Participating Customer Members pursuant to this Agreement.

4.2 "Participating Customer Members" means any Customer that is a current or future member, as permitted under this provision, of Company as of the Effective Date and as set forth in Schedule I. Company may add additional Participating Customer Members from time to time provided that Company provides Omnicell with written notice of such addition thirty (30) days prior to such Participating Customer Member's purchase, lease and/or license of the Omnicell Products under this Agreement.

4.3 "Preferred Relationship" means the relationship between Company, on behalf of its Participating Customer Members, and Omnicell as is set forth specifically in Schedules G, H, I and J of this Agreement.

4.4 "Preferred Pricing" means the pricing set forth in Schedule H for the Omnicell Products.

4.5 "Sole Source Provider" means wherein Omnicell is a Participating Customer Member's sole provider of one hundred percent (100%) of a Participating Customer Member's total required need (as measured by purchase order dollars) for such pharmacy or supply automation equipment as selected within Schedule J.

4.6 "Product Categories" means the automated supply and pharmacy distribution systems products categories set forth in Schedule J.

This document contains the Confidential Information of Omnicell, Inc.
Use or disclosure of this document is prohibited without Omnicell's express written consent.

SCHEDULE H

OMNICELL DELIVERED PRODUCTS PRICING

As part of this Preferred Relationship, Omnicell will provide to Participating Customer Members the net prices shown on the matrix below. There is no minimum purchase order dollar amount required to receive this pricing. Omnicell Products prices will be held firm for the first two (2) years of this Preferred Relationship. Pricing in years 3, 4, and 5 of this Preferred Relationship may increase by a maximum of five percent (5%) per year. The product codes listed do not reflect Omnicell's entire offering as of the Effective Date of this Agreement. However, the discounting methodologies applied herein will be extended to all Omnicell product codes that pertain to the Product Categories referenced in Schedule J - Product Categories as selected in this Preferred Relationship. Omnicell cannot commit to pricing on products that have not yet been developed and / or manufactured; however it is understood that both parties will mutually agree on pricing for new and/or breakthrough technology and products that are added to the Product Categories after the Effective Date as part of this Agreement. Notwithstanding the above, Support Service pricing, interfaces, labor, training, Pandora products and Professional Service offerings are not covered by the above price increase limitations and are subject to change effective as of the anniversary of a Pricing Supplement for such Support Services and purchase of such interfaces, labor, training, Pandora products and/or Professional Service offerings.

Product	Description	USA List Price Purchase	Agreement Price List Purchase
MDA-CNS-001	OmniRx lid upgrade to G4 console	$11,500.00	$11,500.00
MDA-CNS-001-CI	OMNIRX LID UPG-INTEROPERABILITY CERTIFIED	$11,500.00	$11,500.00
MDA-DRW-001	FLEXBIN 2222 SINGLEDOSE DRWR GUIDE LIGHT	$5,500.00	$3,575.00
MDA-DRW-002	FLEXBIN 3131 SINGLEDOSE DRWR GUIDE LIGHT	$5,500.00	$3,575.00
MDA-DRW-003	FLEXBIN 96 SINGLEDOSE DRWR GUIDE LIGHT	$5,500.00	$3,575.00
MDA-DRW-004	8-BIN LOCKING DRAWER	$4,000.00	$2,600.00
MDA-FRM-001	One-Cell Rx G4	$22,000.00	$14,300.00
MDA-FRM-001-CI	1-CELL OMNIRX-INTEROPERABILITY CERTIFIED	$22,000.00	$14,300.00
MDA-FRM-002	Two-Cell Rx G4	$24,000.00	$15,600.00
MDA-FRM-002-CI	2-CELL OMNIRX-INTEROPERABILITY CERTIFIED	$24,000.00	$15,600.00
MDA-FRM-003	Three-Cell Rx G4	$29,000.00	$18,850.00
MDA-FRM-003-CI	3-CELL OMNIRX-INTEROPERABILITY CERTIFIED	$29,000.00	$18,850.00
MDA-FRM-004	OmniRx Half-cell G4	$17,000.00	$11,050.00
MDA-FRM-004-CI	OMNIRX HALF-CELL-INTEROPERABILITY CERTIFIED	$17,000.00	$11,050.00
MDA-FRM-005	OmniRx G4	$22,750.00	$14,787.50
MDA-FRM-005-CI	OMNIRX-INTEROPERABILITY CERTIFIED	$22,750.00	$14,787.50
MDA-FRM-006	OmniRx-TT G4	$16,900.00	$10,985.00

This document contains the Confidential Information of Omnicell, Inc.
Use or disclosure of this document is prohibited without Omnicell's express written consent.

Product	Description	USA List Price Purchase	Agreement Price List Purchase
MDA-FRM-006-CI	OMNIRX TT - INTEROPERABILITY CERTIFIED	$16,900.00	$10,985.00
MDA-HDW-001	Standard OmniDispenser Kit	$0.00	$0.00
MDA-LIC-002	RX REMOTE ITEMS (3000 MAX)	$4,000.00	$2,600.00
MDA-OPT-001	External Return Bin Installed	$3,000.00	$1,950.00
MDA-OPT-002	EXTERNAL RETURN BIN,G4 A LA CARTE	$3,000.00	$1,950.00
MDA-OPT-003	MED PRINTER LABELS - BOX (6 ROLLS)	$87.00	$87.00
MDA-OPT-006	BEST PRACTICE PACKAGE	$4,795.00	$3,116.75
MDA-PCB-001	Rx PC box upgrade to G4 console	$11,500.00	$11,500.00
MDA-PCB-001-CI	RX PC BOX UPG-INTEROPERABILITY CERTIFIED	$11,500.00	$11,500.00
MDA-PCB-002	Rx Aux/Blue to PC Box G4 console	$11,500.00	$11,500.00
MDA-PCB-002-CI	RX AUX/BLUE TO PC BOX-INTEROP CERT	$11,500.00	$11,500.00
MDA-PNT-001	Medication Label Printer (G4 PC Box)	$3,200.00	$2,080.00
MDA-PNT-002	Medication Label Printer (G4 Lid)	$3,200.00	$2,080.00
MDA-SCN-001	2D SAFETYSTOCK (OMNIRX, TT, HALF RX)	$2,095.00	$1,361.75
MDA-SCN-002	2D SAFETYSTOCK (1,2,3 CELL)	$2,095.00	$1,361.75
MDA-SCN-003	2D SAFETYSTOCK G4 (OMNIRX, TT, HALF RX)	$2,095.00	$1,361.75
MDA-SCN-004	2D SAFETYSTOCK G4 (1,2,3 CELL)	$2,095.00	$1,361.75
ODMRAIL	OmniDispenser Rail	$160.00	$160.00
OLL12	12-Bin Locking Drawer	$4,000.00	$2,600.00
OLL24	24-Bin Locking Drawer	$4,000.00	$2,600.00
OLL6	6-Bin Locking Drawer	$4,000.00	$2,600.00
OLMD24	24-Bin Lighted Matrix Drawer	$1,950.00	$1,267.50
OMD48	96-Bin Matrix Drawer	$1,575.00	$1,023.75
OS3DRXU1	Three Drawer Pharmacy Module (Zone 1)	$7,000.00	$4,550.00
OS3DRXU2	Three Drawer Pharmacy Module (Zone 2)	$7,000.00	$4,550.00
OS3DRXU4	Three Drawer Pharmacy Module (Zone 4)	$7,000.00	$4,550.00
OSOMDP	OPTION KIT,OMNIDISPENSER PLUS3	$18,000.00	$11,700.00
OSOMDRX	Option Kit, OmniDispenserRX	$16,000.00	$10,400.00
OSOMDT	Option Kit, OmniDispenserTall	$16,000.00	$10,400.00
OSPPO	Profile Driven Option	$3,100.00	$2,015.00
OSRXU	Nine Drawer Pharmacy Module	$5,625.00	$3,656.25
OX104RX	One-Cell OmniSupplier Auxiliary	$10,000.00	$6,500.00
OX224RX	Two-Cell OmniSupplier Auxiliary	$12,000.00	$7,800.00
OX344RX	Three-Cell OmniSupplier Auxiliary	$16,500.00	$10,725.00
PROFPLUS	Profile Plus Package	$12,000.00	$7,800.00
PROFPLUS2	Profile Plus Package (W/O SCHMEDS)	$10,000.00	$6,500.00

This document contains the Confidential Information of Omnicell, Inc.
Use or disclosure of this document is prohibited without Omnicell's express written consent.

Product	Description	USA List Price Purchase	Agreement Price List Purchase
RXAX	OmniRx Auxiliary	$14,300.00	$9,295.00
MSA-LIC-001	AnywhereRN	$2,500.00	$1,625.00
MSA-LIC-002	ANYWHERERN (SAVVY)	$2,000.00	$1,300.00
MSA-LIC-100	Anywhere RN 100 licenses	$212,500.00	$138,125.00
MSA-LIC-125	Anywhere RN 125 licenses	$265,625.00	$172,656.25
MSA-LIC-150	Anywhere RN 150 licenses	$318,750.00	$207,187.50
MSA-LIC-175	Anywhere RN 175 licenses	$371,875.00	$241,718.75
MSA-LIC-200	Anywhere RN 200 licenses	$375,000.00	$243,750.00
MSA-LIC-225	Anywhere RN 225 licenses	$421,875.00	$274,218.75
MSA-LIC-250	Anywhere RN 250 licenses	$468,750.00	$304,687.50
MSA-LIC-275	Anywhere RN 275 licenses	$515,625.00	$335,156.25
MSA-LIC-300	Anywhere RN 300 licenses	$525,000.00	$341,250.00
MSA-LIC-325	Anywhere RN 325 licenses	$568,750.00	$369,687.50
MSA-LIC-350	Anywhere RN 350 licenses	$612,500.00	$398,125.00
MSA-LIC-375	Anywhere RN 375 licenses	$656,250.00	$426,562.50
MSA-LIC-400	Anywhere RN 400 licenses	$700,000.00	$455,000.00
ANT-CNS-001	AWS lid upgrade to G4 console	$11,500.00	$11,500.00
ANT-CNS-003	Anesthesia-TT lid upgrade to G4 console	$11,500.00	$11,500.00
ANT-FRM-001	Anesthesia Workstation G4	$36,500.00	$23,725.00
ANT-FRM-002	Anesthesia-TT G4	$16,900.00	$10,985.00
ANT-IDR-001	Bar Code Reader Anesthesia (400CT) G4	$1,250.00	$812.50
ANT-IDR-002	Bar Code Reader Anesthesia (490CT) G4	$1,250.00	$812.50
ANT-IDR-003	Mag Card Reader Anesthesia (TRK1) G4	$1,250.00	$812.50
ANT-IDR-004	Mag Card Reader Anesthesia (TRK3) G4	$1,250.00	$812.50
ANT-IDR-005	Touch & Go Anesthesia G4	$1,595.00	$1,036.75
ANT-IDR-006	Touch & Go/Bar Code Anesthesia (400CT) G4	$2,345.00	$1,524.25
ANT-IDR-007	Touch & Go/Bar Code Anesthesia (490CT) G4	$2,345.00	$1,524.25
ANT-IDR-008	Touch & Go/Mag Card Anesthesia (TRK1) G4	$2,345.00	$1,524.25
ANT-IDR-009	Touch & Go/Mag Card Anesthesia (TRK3) G4	$2,345.00	$1,524.25
ANT-LIC-001	CODONICS SLS ADMINISTER MODE LICENSE	$499.00	$499.00
ANT-LIC-002	CODONICS SLS EMAIL NOTIFIER SINGLE LIC	$500.00	$500.00
ANT-LIC-003	CODONICS SLS EMAIL NOTIFIER SITE LICENSE	$5,000.00	$5,000.00

This document contains the Confidential Information of Omnicell, Inc.
Use or disclosure of this document is prohibited without Omnicell's express written consent.

Product	Description	USA List Price Purchase	Agreement Price List Purchase
ANT-LIC-004	CODONICS SLS EMAIL NOTIFIER REGIONAL LIC	$10,000.00	$10,000.00
ANT-LIC-005	CODONICS SLS EMAIL NOTIFIER ENT LICENSE	$25,000.00	$25,000.00
ANT-OPT-001	Anesthesia Workstation Aux Fold-Out Shelf	$675.00	$438.75
ANT-OPT-002	Anesthesia Workstation Chart Holder	$81.00	$52.65
ANT-OPT-003	Anesthesia Workstation IV Pole	$284.00	$184.60
ANT-OPT-004	Anesthesia Workstation Tilt Bin Organizer	$96.00	$62.40
ANT-OPT-005	Anesthesia Workstation Waste Container	$95.00	$61.75
ANT-OPT-006	KIT,AWS,DRAWER,RETROFIT, HEIGHTEN	$45.00	$29.25
ANT-OPT-007	KIT,OVERRIDE,ANES.,BREAK AWAY	$350.00	$227.50
ANT-OPT-008	Anesthesia Workstation G4 4 Tilt Bin	$78.00	$50.70
ANT-OPT-009	Anesthesia Workstation G4 5 Tilt Bin	$78.00	$50.70
ANT-OPT-010	Anesthesia Workstation G4 6 Tilt Bin	$78.00	$50.70
ANT-OPT-011	AWS G4 Waste/Sharps Basket	$150.00	$97.50
ANT-OPT-012	AWS G4 Sharps Container	$150.00	$97.50
ANT-OPT-013	AWS G4 Waste Container	$250.00	$162.50
ANT-OPT-014	AWS Accessory Bar	$43.00	$27.95
ANT-OPT-015	EXTERNAL RETURN BIN,AWS G4 A LA CARTE	$3,000.00	$1,950.00
ANT-OPT-016	EXTERNAL RETURN BIN,G4 AWS INSTALLED	$3,000.00	$1,950.00
ANT-OPT-018	CODONICS WIRELESS OPTION,SLS500-WIFI	$199.00	$199.00
ANT-OPT-019	CODONICS STARTER KIT,SLS500-STRKIT	$172.00	$172.00
ANT-OPT-020	CODONICS AWS SHELF KIT,SLS500-SHELF-05	$595.00	$595.00
ANT-OPT-022	LINER, 96 BIN MATRIX DRAWER	$41.86	$27.21
ANT-PNT-002	CODONICS SLS,SINGLE SIGN ON/SINGLE SCAN	$13,000.00	$8,450.00
ANT-SCN-001	2D Item Scan (Anesthesia)	$2,095.00	$1,361.75
ANT-SCN-002	AWS G4 2D Item Scan	$2,095.00	$1,361.75
ANT-SCN-004	LINEAR ITEM SCAN G4 (NEW ANESTHESIA)	$1,595.00	$1,036.75
ANT-SCN-006	2D ITEMSCAN G4 ANTT	$2,095.00	$1,361.75

This document contains the Confidential Information of Omnicell, Inc.
Use or disclosure of this document is prohibited without Omnicell's express written consent.

Product	Description	USA List Price Purchase	Agreement Price List Purchase
ANT-SCN-008	CODONICS SCANNER KIT W/ KEY,SLS500-HSCN	$499.00	$499.00
ANT-SFW-001	CODONICS SLS ADMIN TOOL SW,SINGLE LIC	$1,375.00	$1,375.00
ANT-SFW-002	CODONICS SLS ADMIN TOOL SW,SITE LIC	$13,750.00	$13,750.00
ANT-SFW-003	CODONICS SLS ADMIN TOOL SW,REGIONAL LIC	$27,500.00	$27,500.00
ANT-SFW-004	CODONICS SLS ADMIN TOOL SW,ENTERPRISE LIC	$68,750.00	$68,750.00
OASD1	Anesthesia Supply Drawer	$600.00	$390.00
OASD2	Double-Deep Anesthesia Supply Drawer	$850.00	$552.50
OASD3	Triple-Deep Anesthesia Supply Drawer	$1,050.00	$682.50
CSM-AIO-001	CSM Software and Workstation Kit (Contains AIO)	$53,000.00	$34,450.00
CSM-AIO-002	HW Conv Kit, SV/NV Blue, CSM Software and Workstation	$23,000.00	$14,950.00
CSM-AIO-003	HW Conv Kit, SV/NV CT, CSM Software and Workstation	$23,000.00	$14,950.00
CSM-AIO-005	CSM Satellite Installation (Contains AIO), Up to 4 Locations	$20,000.00	$20,000.00
CSM-AIO-009	CSM Software for Vaults and Workstation Kit	$53,000.00	$34,450.00
CSM-AIO-010	SV SWO to CSM SWO Conversion Kit	$23,000.00	$14,950.00
CSM-AIO-011	CSM Complete Installation Kit with Interfaces	$53,000.00	$34,450.00
CSM-AIO-012	CSM Blue Complete Conversion Kit with Interfaces	$23,000.00	$14,950.00
CSM-AIO-013	CSM CT Complete Conversion Kit with Interfaces	$23,000.00	$14,950.00
CSM-AIO-014	CSM Software for Vaults and Workstation Kit	$53,000.00	$34,450.00
CSM-AIO-015	SV SWO to CSM SWO Conversion Kit	$23,000.00	$14,950.00
CSM-FRM-001	One Cell CSM AUX	$10,000.00	$6,500.00
CSM-FRM-002	Two Cell CSM AUX	$12,000.00	$7,800.00
CSM-FRM-003	Three Cell CSM AUX	$16,500.00	$10,725.00
CSM-FRM-007	METAL DOOR, 1-CELL CSM, AUX	$12,000.00	$7,800.00
CSM-FRM-008	METAL DOOR, 2-CELL CSM, AUX	$14,500.00	$9,425.00
CSM-FRM-009	METAL DOOR, 3-CELL CSM, AUX	$19,500.00	$12,675.00

This document contains the Confidential Information of Omnicell, Inc.
Use or disclosure of this document is prohibited without Omnicell's express written consent.

Product	Description	USA List Price Purchase	Agreement Price List Purchase
CSM-OPT-001	Hardware Conversion Narc Vault AUX to CSM AUX Cabinet	$200.00	$130.00
CSM-PNT-001	Sato M-84PRO Label Printer	$3,760.00	$2,444.00
CSM-SCN-001	2D Barcode Scanner, CSM	$2,000.00	$1,300.00
SP	SinglePointe	$4,000.00	$2,600.00
SP100	SinglePointe 100 licenses	$280,000.00	$182,000.00
SP25	SinglePointe 25 licenses	$85,000.00	$55,250.00
SP30	SinglePointe 30 licenses	$102,000.00	$66,300.00
SP35	SinglePointe 35 licenses	$119,000.00	$77,350.00
SP4	SinglePointe Bundle of 1st 4 Licenses	$16,000.00	$10,400.00
SP40	SinglePointe 40 licenses	$136,000.00	$88,400.00
SP45	SinglePointe 45 licenses	$153,000.00	$99,450.00
SP50	SinglePointe 50 licenses	$150,000.00	$97,500.00
SP55	SinglePointe 55 licenses	$165,000.00	$107,250.00
SP60	SinglePointe 60 licenses	$180,000.00	$117,000.00
SP65	SinglePointe 65 licenses	$195,000.00	$126,750.00
SP70	SinglePointe 70 licenses	$210,000.00	$136,500.00
SP75	SinglePointe 75 licenses	$210,000.00	$136,500.00
SP80	SinglePointe 80 licenses	$224,000.00	$145,600.00
SP85	SinglePointe 85 licenses	$238,000.00	$154,700.00
SP90	SinglePointe 90 licenses	$252,000.00	$163,800.00
SP95	SinglePointe 95 licenses	$266,000.00	$172,900.00
SPPLUS	SinglePointe Plus Package	$16,000.00	$10,400.00
SPPLUS2	SinglePointe Plus Package (W/O SCHMEDS)	$14,000.00	$9,100.00
SPSERV	SinglePointe Server Configuration	$12,000.00	$12,000.00
MULTIS	Multiple Installation Support	$20,000.00	$20,000.00
OCRA1	OmniCenter Remote Access (single user)	$7,500.00	$4,875.00
OCRAB	OmniCenter Remote Access Bronze	$25,000.00	$16,250.00
OCRACL	OmniCenter Remote Access TS CAL	$150.00	$97.50
OCRAG	OmniCenter Remote Access Gold (20 users)	$75,000.00	$48,750.00
OCRAS	OmniCenter Remote Access Silver	$45,000.00	$29,250.00
OEXPL	OmniExplorer (Desktop)	$50,000.00	$32,500.00
OMC-BDL-006-CI	Cerner eMAR Interoperability Server Package_Base (Rack)	$74,500.00	$74,500.00
OMC-BDL-007-CI	Cerner eMAR Interoperability Server Package_Base (Tower)	$74,500.00	$74,500.00

This document contains the Confidential Information of Omnicell, Inc.
Use or disclosure of this document is prohibited without Omnicell's express written consent.

Product	Description	USA List Price Purchase	Agreement Price List Purchase
OMC-BDL-008-CI	Cerner eMAR Interoperability Server Package_Base Plus	$96,000.00	$96,000.00
OMC-BDL-009-CI	Cerner eMAR Interoperability Server Package_Virtual	$70,000.00	$70,000.00
OMC-BDL-010	CAH Base Rack Server Bundle	$30,000.00	$19,500.00
OMC-BDL-011	CAH Base Tower Server Bundle	$30,000.00	$19,500.00
OMC-BDL-012	CAH Base Virtual App Server Bundle	$30,000.00	$19,500.00
OMC-CPS-003	NEW – CPS OCTEST	$6,200.00	$6,200.00
OMC-CPS-004	CONVERSION – CPS OCTEST	$5,300.00	$5,300.00
OMC-CPS-005	OMNICENTER PHARMACY SOFTWARE	$40,000.00	$40,000.00
OMC-CPS-006	OMNICENTER SUPPLY SOFTWARE	$40,000.00	$40,000.00
OMC-CPS-007	OMNICENTER SUPPLY AND PHARMACY SOFTWARE	$55,000.00	$55,000.00
OMC-CPS-008	OMNICENTER PHARMACY SOFTWARE	$5,300.00	$5,300.00
OMC-CPS-009	OMNICENTER SUPPLY SOFTWARE	$5,300.00	$5,300.00
OMC-CPS-010	OMNICENTER SUPPLY AND PHARMACY SOFTWARE	$5,300.00	$5,300.00
OMC-LAB-001	One Time Charge for Time & Material Customers to Upgrade their Server Software	$40,000.00	$26,000.00
OMC-LAB-002	INFORMATION ASSURANCE MGMT SETUP FEE	$15,000.00	$15,000.00
OMC-LIC-001	CLOSED LOOP–SIEMENS (PERPETUAL)	$25,000.00	$16,250.00
OMC-LIC-003-CI	OMNICELL CONNECTOR - CERNER	$25,000.00	$25,000.00
OMC-LIC-004-CI	EMAR/ADC LICENSE	$35,000.00	$22,750.00
OMC-LIC-005	OC REMOTE ACCESS WIN2012 UPG (SINGLE)	$675.00	$675.00
OMC-LIC-006	OC REMOTE ACCESS WIN2012 UPGRADE (BRONZE)	$1,625.00	$1,625.00
OMC-LIC-007	OC REMOTE ACCESS WIN2012 UPGRADE (SILVER)	$3,600.00	$3,600.00
OMC-LIC-008	OC REMOTE ACCESS WIN2012 UPGRADE (GOLD)	$7,300.00	$7,300.00
OMC-LIC-013	OMNICENTER REMOTE ACCESS RDS LICENSE	$115.00	$74.75
OMC-LIC-014-EI	OMNICELL CONNECTOR - EPIC	$25,000.00	$25,000.00
OMC-LIC-015-EI	EMAR/ADC LICENSE - EPIC	$35,000.00	$22,750.00
OMC-PNT-001	SafetyStock Thermal Printer (Sato)	$3,760.00	$2,444.00

This document contains the Confidential Information of Omnicell, Inc.
Use or disclosure of this document is prohibited without Omnicell's express written consent.

Product	Description	USA List Price Purchase	Agreement Price List Purchase
OMC-SCN-001	SafetyStock w/Intellistand (OPC or addl Server Locations))	$1,595.00	$1,036.75
OMC-SCN-002	SafetyStock OmniCenter Suite	$5,455.00	$3,545.75
OMC-SCN-003	2D SAFETYSTOCK OMNICENTER SUITE (SCANNER)	$6,095.00	$3,961.75
OMC-SCN-004	2D SAFETYSTOCK (ADDL SERVER)	$2,095.00	$1,361.75
OMC-SFW-001	Virtualization New, OmniCenter & Pharmacy SW	$35,000.00	$22,750.00
OMC-SFW-002	Virtualization New, OmniCenter & Supply SW	$35,000.00	$22,750.00
OMC-SFW-003	Virtualization New, OmniCenter, Pharmacy & Supply SW	$41,400.00	$26,910.00
OMC-SFW-013	Virtualization Conversion, OIS	$4,000.00	$4,000.00
OMC-SFW-018	Virtualization New, Test VM, DIACAP	$10,000.00	$10,000.00
OMC-SFW-019	Virtual Applicance New, (VSR) OmniCenter App Not Included, DIACAP	$10,000.00	$10,000.00
OMC-SFW-020	Wirtual Appliance Upgrade, (VSR) OmniCenter, DIACAP	$5,500.00	$5,500.00
OMC-SFW-021	Virtualization Upgrade, Test VM, DIACAP	$5,500.00	$5,500.00
OMC-SFW-022	OMNICENTER PHARMACY SOFTWARE	$40,000.00	$26,000.00
OMC-SFW-023	OMNICENTER SUPPLY SOFTWARE	$40,000.00	$26,000.00
OMC-SFW-024	OMNICENTER SUPPLY AND PHARMACY SOFTWARE	$55,000.00	$35,750.00
OMC-SFW-025	OMNICENTER TEST SOFTWARE	$10,000.00	$6,500.00
OMC-SFW-026	OMNICENTER BACKUP SERVER SOFTWARE	$10,000.00	$6,500.00
OMC-SFW-027	OMNICENTER VIRT APPL NEW, BASE +, 2012	$18,000.00	$18,000.00
OMC-SFW-028	OMNICENTER VIRT APPL UPGRADE, BASE +, 2012	$11,000.00	$11,000.00
OMC-SFW-029	OMNICENTER VIRT APPL TEST NEW, BASE +, 2012	$18,000.00	$18,000.00
OMC-SFW-030	OMNICENTER VIRT APPL TEST UPGRADE, BASE +, 2012	$11,000.00	$11,000.00
OMC-SFW-039	OMNICENTER VIRT APPL NEW, BASE, 2012	$10,000.00	$10,000.00
OMC-SFW-040	OMNICENTER VIRT APPL UPGRADE, BASE, 2012	$5,500.00	$5,500.00

This document contains the Confidential Information of Omnicell, Inc.
Use or disclosure of this document is prohibited without Omnicell's express written consent.

Product	Description	USA List Price Purchase	Agreement Price List Purchase
OMC-SFW-041	OMNICENTER VIRT APPL TEST NEW, BASE, 2012	$10,000.00	$10,000.00
OMC-SFW-042	OMNICENTER VIRT APPL TEST UPGRADE, BASE, 2012	$5,500.00	$5,500.00
OMC-SRV-055	OMNICENTER BASE SERVER (TOWER)	$14,500.00	$14,500.00
OMC-SRV-056	OMNICENTER BASE SERVER (RACK)	$14,500.00	$14,500.00
OMC-SRV-057	OMNICENTER BASE BACKUP SERVER (TOWER)	$14,500.00	$14,500.00
OMC-SRV-058	OMNICENTER BASE BACKUP SERVER (RACK)	$14,500.00	$14,500.00
OMC-SRV-059	OMNICENTER BASE TEST SERVER (TOWER)	$14,500.00	$14,500.00
OMC-SRV-060	OMNICENTER BASE TEST SERVER (RACK)	$14,500.00	$14,500.00
OMC-SRV-061	OMNICENTER BASE HARDWARE UPGRADE (TOWER)	$14,500.00	$14,500.00
OMC-SRV-062	OMNICENTER BASE HARDWARE UPGRADE (RACK)	$14,500.00	$14,500.00
OMC-SRV-063	OMNICENTER BASE PLUS SERVER	$36,000.00	$36,000.00
OMC-SRV-064	OMNICENTER TEST BASE PLUS SERVER	$36,000.00	$36,000.00
OMC-SRV-065	OMNICENTER BACKUP BASE PLUS SERVER	$36,000.00	$36,000.00
OMC-SRV-066	OMNICENTER HW UPG BASE PLUS SERVER	$36,000.00	$36,000.00
OMS01	Remote Item Omni	$1,500.00	$975.00
OMSRRX250	Remote Rx Item	$2,500.00	$1,625.00
OMSRX01	Remote Rx Item Omni	$1,500.00	$975.00
SCHMEDS	Scheduled Meds	$2,000.00	$1,300.00
SRD-BDL-001	NON-ACUTE CARE BUNDLE-VIRTUAL SERVER & INTERFACES	$20,000.00	$20,000.00
SRD-BDL-002	NON-ACUTE CARE BUNDLE-RACK SERVER & INTERFACES	$20,000.00	$20,000.00
MNTR	Dell Monitor Option	$440.00	$440.00
MSA-LAB-001	One Time Charge for Time & Material Customers to Upgrade their Cabinet Software	$5,000.00	$3,250.00
MSA-LAB-002	T&M SW UPG FEE/FRAME <90 DAY SRV LAPSE	$500.00	$500.00
MSA-LAB-003	T&M SW UPG FEE/FRAME >90 DAY SRV LAPSE	$1,000.00	$1,000.00

This document contains the Confidential Information of Omnicell, Inc.
Use or disclosure of this document is prohibited without Omnicell's express written consent.

Product	Description	USA List Price Purchase	Agreement Price List Purchase
MSA-LIC-003-CI	CABINET INTEROPERABILITY LICENSE,CERNER	$2,400.00	$1,560.00
MSA-LIC-005-EI	CABINET INTEROPERABILITY LICENSE,EPIC	$2,400.00	$1,560.00
MSA-OPT-001	FlexLock with TempCheck (50 ft cable)	$3,400.00	$2,210.00
MSA-OPT-002	Cable,Symbol 1D/2D Imager,Synapse,9 ft	$105.00	$68.25
MSA-OPT-003	Cable,Symbol 1D/2D Imager,Synapse,16 ft	$135.00	$87.75
MSA-OPT-004	Wireless Network - G4 cabinet & upgrade	$1,065.00	$692.25
MSA-OPT-005	CT XP G4 to Windows 7 console	$5,000.00	$5,000.00
MSA-OPT-006	FLEXLOCK WITH TEMPCHECK (50FT) INSTL G4	$3,400.00	$2,210.00
MSA-OPT-007	FLEXLOCK WITH TEMPCHECK (12FT) INSTL G4	$3,400.00	$2,210.00
MSA-OPT-008	FLEXLOCK WITH TEMPCHECK (50FT) G4	$3,400.00	$2,210.00
MSA-OPT-009	FLEXLOCK WITH TEMPCHECK (12FT) G4	$3,400.00	$2,210.00
MSA-OPT-011	SEISMIC RESTRAINT OMNIRX LPCH CUSTOM	$1,282.00	$833.30
MSA-OPT-012	SEISMIC RESTRAINT 1,2,3-CELL LPCH CUSTOM	$1,603.31	$1,042.15
MSA-OPT-013	CORDED SCANNER HOLDER	$235.00	$152.75
MSA-OPT-014	FLEXLOCK WITH TEMPCHECK (50FT) INSTL,2.0	$3,950.00	$2,567.50
MSA-OPT-015	FLEXLOCK WITH TEMPCHECK (12FT) INSTL,2.0	$3,950.00	$2,567.50
MSA-OPT-016	FLEXLOCK WITH TEMPCHECK (50FT),2.0	$3,950.00	$2,567.50
MSA-OPT-017	FLEXLOCK WITH TEMPCHECK (12FT)2.0	$3,950.00	$2,567.50
MSA-SCN-003	OMNISCANNER WITH HANDHELD 2D	$2,495.00	$1,621.75
MSA-SCN-004	OMNISCANNER WITH HANDHELD 2D FOR G4	$2,495.00	$1,621.75
MSA-SCN-005	RX/TT/HALF-CELL OMNISCANNER 2D	$2,495.00	$1,621.75
MSA-SCN-006	RX/TT/HALF-CELL OMNISCANNER 2D FOR G4	$2,495.00	$1,621.75
MSA-SCN-007	2D IMPLANT TRACKING MODULE	$4,175.00	$2,713.75
OCFLTCK	FlexLock with TempCheck	$3,400.00	$2,210.00
OERB50	External Return Bin 50 Foot Cable	$122.50	$122.50
OEXPLCT	OmniExplorer (Per CT Cabinet)	$5,000.00	$3,250.00

This document contains the Confidential Information of Omnicell, Inc.
Use or disclosure of this document is prohibited without Omnicell's express written consent.

Product	Description	USA List Price Purchase	Agreement Price List Purchase
OMSCR250	Remote Item	$2,500.00	$1,625.00
OSD24	Omnicell Drawer Module	$2,250.00	$1,462.50
OTH-LAB-001	On Site Operations Support	$2,000.00	$2,000.00
PS1	Pull-out Shelf	$675.00	$438.75
SRD-IDR-010	Mag Card Reader Consl No PNT (TRK1)	$2,345.00	$1,524.25
SRD-IDR-011	Mag Card Reader Consl No PNT (TRK3)	$2,345.00	$1,524.25
SRD-IDR-012	Touch & Go/Bar Code (400) for G4 PC Box	$2,345.00	$1,524.25
SRD-IDR-013	Touch & Go/Bar Code (490) for G4 PC Box	$2,345.00	$1,524.25
SRD-IDR-014	Touch & Go/Mag Card (TRK1) for G4 PC Box	$2,345.00	$1,524.25
SRD-IDR-015	Touch & Go/Mag Card (TRK3) for G4 PCBox	$2,345.00	$1,524.25
SRD-IDR-016	Touch & Go for G4 PC Box console	$1,595.00	$1,036.75
SRD-IDR-017	Bar Code Reader (400) for G4 PC Box	$1,250.00	$812.50
SRD-IDR-018	Bar Code Reader (490) for G4 PC Box	$1,250.00	$812.50
SRD-IDR-019	Mag Card Reader (TRK1) for G4 PC Box	$1,250.00	$812.50
SRD-IDR-020	Mag Card Reader (TRK3) for G4 PC Box	$1,250.00	$812.50
SRD-IDR-021	Touch & Go for G4 lid console	$1,595.00	$1,036.75
SRD-IDR-022	Bar Code Reader (400) for G4 lid cnsl	$1,250.00	$812.50
SRD-IDR-023	Bar Code Reader (490) for G4 lid console	$1,250.00	$812.50
SRD-IDR-024	Mag Card Reader (TRK1) for G4 lid cnsl	$1,250.00	$812.50
SRD-IDR-025	Mag Card Reader (TRK3) G4 lid console	$1,250.00	$812.50
SRD-IDR-026	Touch & Go/Bar Code (400) for G4 lid	$2,345.00	$1,524.25
SRD-IDR-027	Touch & Go/Bar Code (490) for G4 lid	$2,345.00	$1,524.25
SRD-IDR-028	Touch & Go/Mag Card (TRK1) for G4 lid	$2,345.00	$1,524.25
SRD-IDR-029	Touch & Go/Mag Card (TRK3) for G4 lid	$2,345.00	$1,524.25
TRAINADV	Advanced System Administrator	$1,400.00	$1,400.00
TRAINBM	BioMed Training	$3,500.00	$3,500.00
TRAINOSADVRX2.5	Onsite Advanced System Administrator Training (Pharmacy 2.5 days)	$7,500.00	$7,500.00
TRAINOSADVRX3.5	Onsite Advanced System Administrator Training (Pharmacy 3.5 days)	$9,500.00	$9,500.00
TRAINRX	System Administrator Training (Pharmacy)	$1,800.00	$1,800.00
WB1CT	Web Browser	$3,200.00	$2,080.00
OLRXCPS	OmniLinkRx Server Software - Hardware Not Included	$22,000.00	$22,000.00

This document contains the Confidential Information of Omnicell, Inc.
Use or disclosure of this document is prohibited without Omnicell's express written consent.

Product	Description	USA List Price Purchase	Agreement Price List Purchase
OLRXFAX	Fax Solution	$10,000.00	$10,000.00
OLRXMIS	OmniLinkRx Multiple Installation Support	$18,000.00	$18,000.00
OLRXPVU	OmniLinkRx Pharmacy Viewer User Option	$5,000.00	$3,250.00
OLRXSL	OmniLinkRx Sending Location Option	$5,150.00	$3,347.50
OLRXST	OmniLinkRx Tower Solution	$30,000.00	$30,000.00
OLRXTXT01	OmniLinkRx Application Software	$0.00	$0.00
OLRXTXT03	SQL Server License	$0.00	$0.00
OLX-CPS-001	OMNILINK CPS REPLACEMENT/UPGRADE	$4,800.00	$4,800.00
OLX-LIC-005	OMNILINKRX BAR CODE RECOGNITION OPTION	$10,000.00	$10,000.00
OLX-SFW-001	OMNILINKRX,VITRTUAL APPLIANCE,NEW	$10,000.00	$10,000.00
OLX-SFW-002	OMNILINKRX,VIRTUAL APPLIANCE,UPGRADE	$5,500.00	$5,500.00
OLX-SFW-003	OMNILINKRX,VIRTUAL APPLIANCE,NEW,WIN2012	$10,000.00	$10,000.00
OLX-SFW-004	OMNILINKRX,VIRTUAL APPL,UPGRADE,WIN2012	$5,500.00	$5,500.00
OLX-SRV-003	OMNILINKRX SERVER RACK MOUNT, 2012	$30,000.00	$30,000.00
OLX-SRV-004	OMNILINKRX SERVER TOWER,2012	$30,000.00	$30,000.00
OLX-SRV-005	OMNILINKRX SERVER RACK,UPGRADE,2012	$10,000.00	$10,000.00
OLX-SRV-006	OMNILINKRX SERVER TOWER,UPGRADE,2012	$10,000.00	$10,000.00

Conversion Incentive
An additional twenty percent (20%) one-time conversion discount off of the then-current USA List Price on Delivered Products replacing installed competitive equipment will be applied to the Participating Customer Member's initial Delivered Product order. This discount will only apply to discountable Delivered Products, excludes the Pandora Delivered Products and is mutually exclusive from any new facility incentive discount provided hereunder.

New Facility Incentive
An additional twenty percent (20%) one-time new facility (meaning a facility with no previous automation technology) discount off of the then-current USA List Price will be applied to the Participating Customer Member's initial Delivered Product order. This discount will only apply to discountable Delivered Products, excludes the Pandora Delivered Products and is mutually exclusive from any conversion incentive discount provided hereunder.

This document contains the Confidential Information of Omnicell, Inc.
Use or disclosure of this document is prohibited without Omnicell's express written consent.

SCHEDULE I

PARTICIPATING CUSTOMER MEMBERS SCHEDULE

Desert Willow Treatment Center (DWTC)
6171 West Charleston Blvd.,
Las Vegas, NV 89146
CSN: 355505

Dini Townsend Psychiatric Hospital
480 Galletti Way,
Sparks, NV 89431
CSN: 23541

Lake's Crossing Center
500 Galletti way.,
Sparks, NV 89431
CSN: 355506

Rawson Neal Psychiatric Hospital
1650 Community College Dr.,
Las Vegas, NV 89146
CSN: 355504

Stein Hospital
6161 W Charleston Blvd.,
Las Vegas, NV 89146
CSN: 23557

This document contains the Confidential Information of Omnicell, Inc.
Use or disclosure of this document is prohibited without Omnicell's express written consent.

SCHEDULE J

PRODUCT CATEGORIES SCHEDULE

☒ **Automated Pharmacy Dispensing Cabinets**

☐ **Automated Supply Management Solutions**

☒ **Digital Pharmacy Order Management**

☐ **Automated Pharmacy Carousel Inventory Management System**

☐ **Automated Oral Solid Barcode Packaging System**

☐ **Automated Dispensing System Analytics**

☐ **Mobile Medication System**

This document contains the Confidential Information of Omnicell, Inc.
Use or disclosure of this document is prohibited without Omnicell's express written consent.

CERTIFICATE OF LIABILITY INSURANCE

DATE (MM/DD/YYYY): 08/31/2015

THIS CERTIFICATE IS ISSUED AS A MATTER OF INFORMATION ONLY AND CONFERS NO RIGHTS UPON THE CERTIFICATE HOLDER. THIS CERTIFICATE DOES NOT AFFIRMATIVELY OR NEGATIVELY AMEND, EXTEND OR ALTER THE COVERAGE AFFORDED BY THE POLICIES BELOW. THIS CERTIFICATE OF INSURANCE DOES NOT CONSTITUTE A CONTRACT BETWEEN THE ISSUING INSURER(S), AUTHORIZED REPRESENTATIVE OR PRODUCER, AND THE CERTIFICATE HOLDER.

IMPORTANT: If the certificate holder is an ADDITIONAL INSURED, the policy(ies) must be endorsed. If SUBROGATION IS WAIVED, subject to the terms and conditions of the policy, certain policies may require an endorsement. A statement on this certificate does not confer rights to the certificate holder in lieu of such endorsement(s).

PRODUCER
MARSH RISK & INSURANCE SERVICES
1732 NORTH FIRST STREET, SUITE 400
CA LICENSE NO. 0437153
SAN JOSE, CA 95112
Attn: SanJose.CertRequest@marsh.com
101853-STND-GAWUP-15-16

CONTACT NAME:
PHONE (A/C, No, Ext): FAX (A/C, No):
E-MAIL ADDRESS:

INSURER(S) AFFORDING COVERAGE	NAIC #
INSURER A : Zurich American Insurance Company	16535
INSURER B : N/A	N/A
INSURER C : N/A	N/A
INSURER D : Travelers Property Casualty Co. Of America	25674
INSURER E :	
INSURER F :	

INSURED
Omnicell, Inc.
590 E. Middlefield Road
Mountain View, CA 94043

COVERAGES **CERTIFICATE NUMBER:** SEA-003004896-01 **REVISION NUMBER:** 3

THIS IS TO CERTIFY THAT THE POLICIES OF INSURANCE LISTED BELOW HAVE BEEN ISSUED TO THE INSURED NAMED ABOVE FOR THE POLICY PERIOD INDICATED. NOTWITHSTANDING ANY REQUIREMENT, TERM OR CONDITION OF ANY CONTRACT OR OTHER DOCUMENT WITH RESPECT TO WHICH THIS CERTIFICATE MAY BE ISSUED OR MAY PERTAIN, THE INSURANCE AFFORDED BY THE POLICIES DESCRIBED HEREIN IS SUBJECT TO ALL THE TERMS, EXCLUSIONS AND CONDITIONS OF SUCH POLICIES. LIMITS SHOWN MAY HAVE BEEN REDUCED BY PAID CLAIMS.

INSR LTR	TYPE OF INSURANCE	ADDL INSD	SUBR WVD	POLICY NUMBER	POLICY EFF (MM/DD/YYYY)	POLICY EXP (MM/DD/YYYY)	LIMITS	
A	X COMMERCIAL GENERAL LIABILITY			CPO591228403	09/01/2015	09/01/2016	EACH OCCURRENCE	$ 1,000,000
	CLAIMS-MADE [X] OCCUR						DAMAGE TO RENTED PREMISES (Ea occurrence)	$ 1,000,000
							MED EXP (Any one person)	$ 10,000
							PERSONAL & ADV INJURY	$ 1,000,000
	GEN'L AGGREGATE LIMIT APPLIES PER:						GENERAL AGGREGATE	$ 5000000
	POLICY [ ] PRO-JECT [ ] LOC						PRODUCTS - COMP/OP AGG	$ 5,000,000
	OTHER:							$
A	AUTOMOBILE LIABILITY			CPO591228403	09/01/2015	09/01/2016	COMBINED SINGLE LIMIT (Ea accident)	$ 1,000,000
	X ANY AUTO						BODILY INJURY (Per person)	$
	ALL OWNED AUTOS / SCHEDULED AUTOS						BODILY INJURY (Per accident)	$
	X HIRED AUTOS / X NON-OWNED AUTOS						PROPERTY DAMAGE (Per accident)	$
							Comp. & Collision	$ DED. $1,000
	UMBRELLA LIAB / OCCUR						EACH OCCURRENCE	$
	EXCESS LIAB / CLAIMS-MADE						AGGREGATE	$
	DED / RETENTION $							$
D	WORKERS COMPENSATION AND EMPLOYERS' LIABILITY			HJUB2G53879015	09/01/2015	09/01/2016	X PER STATUTE / OTHER	
	ANY PROPRIETOR/PARTNER/EXECUTIVE OFFICER/MEMBER EXCLUDED? (Mandatory in NH) Y / N: N	N / A					E.L. EACH ACCIDENT	$ 1,000,000
	If yes, describe under DESCRIPTION OF OPERATIONS below						E.L. DISEASE - EA EMPLOYEE	$ 1,000,000
							E.L. DISEASE - POLICY LIMIT	$ 1,000,000

DESCRIPTION OF OPERATIONS / LOCATIONS / VEHICLES (ACORD 101, Additional Remarks Schedule, may be attached if more space is required)
EVIDENCE OF INSURANCE

CERTIFICATE HOLDER
Omnicell, Inc.
590 E. Middlefield Road
Mountain View, CA 94043

CANCELLATION
SHOULD ANY OF THE ABOVE DESCRIBED POLICIES BE CANCELLED BEFORE THE EXPIRATION DATE THEREOF, NOTICE WILL BE DELIVERED IN ACCORDANCE WITH THE POLICY PROVISIONS.

AUTHORIZED REPRESENTATIVE
of Marsh Risk & Insurance Services
AnnMarie Torio — Annmarie Torio

© 1988-2014 ACORD CORPORATION. All rights reserved.

The ACORD name and logo are registered marks of ACORD

State of Nevada
Department of Administration
Purchasing Division
515 E. Musser Street, Suite 300
Carson City, NV 89701

Brian Sandoval
Governor

Jeffrey Haag
Administrator

SUBJECT:	Amendment 1 to Request for Proposal 3249
RFP TITLE:	Leasing of Pharmaceutical Dispensing System and Related Services
DATE OF AMENDMENT:	May 25, 2016
DATE OF RFP RELEASE:	May 4, 2016
OPENING DATE:	June 13, 2016
OPENING TIME:	2:00 PM
CONTACT:	Teri Becker, Procurement Staff Member

The following shall be a part of RFP ***3249.*** If a vendor has already returned a proposal and any of the information provided below changes that proposal, please submit the changes along with this amendment. You need not re-submit an entire proposal prior to the opening date and time.

---

1. What is your med formulary for each location?

   See embedded documents below for current lists. The RN ADM List is the ADM formulary for Rawson-Neal and Stein Hospitals (14 ADM's total). The DWTC ADM List is the ADM Formulary for Desert Willow Treatment Center (5 ADM's). Lakes' Crossing and Dini-Townsend use the same lists. The State plans to add to the formularies once ADM's with sufficient capacity have been obtained.

   RN-ADM Medication List

   DWTC-ADM Medication List

2. Are there any other Terms & Conditions, that are not included in this RFP that a vendor must agree to?

   The State publishes its terms and conditions within the solicitation.

3. Are you willing to sign a Sole Source Letter for this one time purchase? After this purchase, there will not be any future requirements to purchase Omnicell.

   The State is requiring leases of the equipment, not a purchase. No sole source letter will be approved.

4. We do not supply scanning equipment for the scan stations, we only provide the software. Is Nevada okay with purchasing the scanning hardware from another vendor?

   The State prefers a "turn-key" operation; however, may consider obtaining scanning hardware elsewhere, if in the best interest of the State.

5. Is NSH tracking med by NDC for billing?

   Currently, not in all facilities.

6. Is NSH tracking meds by NDC when changing generics within a bin of the medication cabinet, or do they have to create a new bin for each NDC?

   Not currently, but we want to be able to track changing generics. We have to use one generic NDC to cover all generic NDC's for a medication, but we don't scan at the ADM currently so it hasn't been an issue. We plan to start scanning at the ADM, so we will need to track all NDC's.

7. Would it be acceptable to NSH if the medication automation system required nightly downtime forcing each cabinet to operate on override for up to 2 hours?

   Yes.

   a. It's been expressed to us that the Pyxis ES automation system requires the above due to "core coding fixes"

8. On page 4 of the Request for Proposal (3249) it states, "The new dispensing system must be in place and operational on or before December 31, 2016". Provided that the project can start on October 1, 2016, this date provides only three months to plan, execute, and complete the anticipated project. This may not be possible to achieve if Division of Public and Behavioral Health (DPBH) wants to have a successful project that allows all stakeholders the opportunity to participate, be educated, and operationalize the requested system. Our experience has shown that these implementations typically take nine to twelve months. While it might be possible to achieve this deadline, it will require dedicated resources from the vendor and DPBH to be 100% dedicated to this project. Our experience with other States has shown that it is very difficult for States to dedicate staff 100% to a project.

   To ensure appropriate and thorough project planning, configuration setup, testing, training, and operational readiness, would the state consider either:

   a) Extending the date for the new ADM beyond December 31, 2016 to at least June 30, 2017?

      The State will work with the awarded contractor to obtain a mutually agreeable timeline.

   b) Allowing for alternate timelines to be presented in the response to highlight where the challenges would exist for the requested December 31, 2016 deadline?

      The State will work with the awarded contractor to obtain a mutually agreeable timeline.

9. Is the state of Nevada currently utilizing ADM systems? If so, could you please provide the number of scan stations, locations, and types of devices?

This information is subject to change. Currently, the State has:

- *Rawson-Neal currently has 5 Nursing units with a total of 9 scan stations (capable of scanning MD orders to Pharmacy).*
- *DWTC has 5 nursing stations with 5 scan stations.*
- *Stein Hospital has 4 nursing stations with 4 scan stations.*
- *A significant portion of the scanning technology is proprietary to the current vendor as all-in-one scanning units.*
- *DT has 2 ADMs and scan stations.*
- *Lake's Crossing (main building) has 2 ADMs and scan stations*
- *Lake's Crossing (annex) has 2 ADMs and scan stations*

10. If the state is currently utilizing ADM systems, upon private correspondence, could the state make serial numbers for existing scan stations available to potential bidders? If possible, could the state please outline a process for requesting this information?

The State cannot provide this information. It is proprietary to the current vendor.

11. On page 9 (Section 3.2.2), the RFP states that the following services must be provided, "Real-time 24/7/365, hardware and software technical assistance flowing to Hospital IT and Pharmacy staff, that is dedicated specifically to this account to provide prompt in-person (within 1 hour) response and remote assistance". Are DPBH's terms regarding vendor support of systems generally available to inform and guide vendors? If not, can the State provide additional definition regarding what "technical assistance" means and the use of the term "dedicated"?

"Technical assistance" is 24/7/365 hardware and software communicative technical service, remote or on-site, if necessary, flowing to Hospital IT and Pharmacy Staff within a prompt 1 hour window resulting in a resolution of the issue.

"Dedicated" service refers to the vendor making designated members of their trained technical staff available, as needed, to assist with resolving the issue.

Further, whether vendor training programs are available wherein an on-site State employee can be trained to facilitate the resolution of the issue, in the event technical assistance is not forthcoming on a timely basis.

ALL ELSE REMAINS THE SAME FOR RFP 3249.

Vendor must sign and return this amendment with proposal submitted.

Vendor Name: Omnicell, Inc,

Authorized Signature:

By executing this RFP response Omnicell is not agreeing to State of Nevada terms and conditions and a mutual negotiation of terms and conditions shall be required.

Title: VP & General Manager, Vendor Solutions Sales

Date: 6/13/2016

This document must be submitted in the "State Documents" section/tab of vendors' technical proposal.

State of Nevada
Department of Administration
Purchasing Division
515 E. Musser Street, Suite 300
Carson City, NV 89701

Brian Sandoval
Governor

Jeffrey Haag
Administrator

SUBJECT:	Amendment 2 to Request for Proposal 3249
RFP TITLE:	Leasing of Pharmaceutical Dispensing System and Related Services
DATE OF AMENDMENT:	June 6, 2016
DATE OF RFP RELEASE:	May 4, 2016
OPENING DATE:	June 13, 2016
OPENING TIME:	2:00 PM
CONTACT:	Teri Becker, Procurement Staff Member

The following shall be a part of RFP ***3249.*** If a vendor has already returned a proposal and any of the information provided below changes that proposal, please submit the changes along with this amendment. You need not re-submit an entire proposal prior to the opening date and time.

The following sections of RFP 3249 shall be changed to read:

Section 9.2.1.2 Six (6) identical copies.

Section 9.3.2.2 Six (6) identical copies.

Section 9.4.1.2 Six (6) identical copies.

ALL ELSE REMAINS THE SAME FOR RFP 3249.

Vendor must sign and return this amendment with proposal submitted.

Vendor Name: Omnicell, Inc.

Authorized Signature:

By executing this RFP response Omnicell is not agreeing to State of Nevada terms and conditions and a mutual negotiation of terms and conditions shall be required.

Title: VP & General Manager, Vendor Solutions Sales Date: 6/13/2016

This document must be submitted in the "State Documents" section/tab of vendors' technical proposal.

Task Name	Resource Names	Start	Target Finish	Finish	% Complete
Discovery/Planning					
Kickoff Meeting	Nursing, Pharmacy, Materials Mgmt, Pharmacy & Site IT/IS, Proj. Managers	1/4/2016	1/4/2016		0.00%
Detailed Site Review for all Cabinet locations	"				0.00%
Identify Network Port Needs	"				0.00%
Discuss LTC & Omnicell's Responsibilities	"				0.00%
Discuss Master Items & User Database	"				0.00%
Discuss Training (RDM if applicable)	"				0.00%
Provide All Docs/Guides/Tutorial Logins	"				0.00%
Discuss Project Plan	"				0.00%
Identify Potential Roadblocks	"				0.00%
Request for Project Lead/System Administrator	"				0.00%
Request for Other Appropriate Contacts	"				0.00%
Confirm Ship-To's	"				0.00%
Set Preliminary RLD's *MILESONE*	OMCL Proj. Manager	1/11/2016	1/15/2016		0.00%
Data Build					
Data Build Meetings					
IT Spec Review Meeting	Pharmacy & Site IT/IS, Proj. Managers, OMCL Field Engineer and/or Systems Tech Mgr.	1/11/2016	1/11/2016		0.00%
Review vSuite White Paper	"				0.00%
Review Server Specs	"				0.00%
Review Cabinet Communication Minimum Requirements	"				0.00%
Determine Remote Connectivity Preferences	"				0.00%
Obtain IP's	"				0.00%
Interface Spec Review Meeting	Pharmacy IT/IS, Proj. Managers, OMCL Interface Analyst, PIS Interface Analyst	1/14/2016	1/14/2016		0.00%
Determine PIS	"				0.00%
Review HL7 Specs	"				0.00%
Discuss Testing Timelines & Requirements	"				0.00%
Items/Configurations/Users Database Meeting	Pharmacy, Nursing, Proj. Managers	1/18/2016	1/18/2016		0.00%
Review User Template & Profiles	"				0.00%
Review Items Template	"				0.00%
Review RxInterview Document	"				0.00%
Provide Sample Policies & Procedures	"				0.00%
Server Installation					
Server Installation *MILESTONE*	Pharmacy IT/IS, OMCL Field Engineer and/or Systems Tech Mgr.	1/11/2016	2/1/2016		0.00%
Setup OmniCenter Server	"				0.00%
Set Up vDirector	"				0.00%
Test Communication/Network Lines	"				0.00%
Install All Licensed Features, Setup Email & Printers	"				0.00%
Web Server Address Requested (for email reporting)	"				0.00%
Interface Installation *MILESTONE*	Pharmacy IT/IS, PIS Interface Analyst	2/1/2016	2/15/2016		0.00%
Test Communication/Ports	"				0.00%
Data Builds					
Cabinet Builds on Omnicenter	Pharmacy IT/IS, PIS Interface Analyst, OMCL Imp.. Specialist, OMCL Interface Analyst	2/1/2016	2/5/2016		0.00%
Site ID	"				0.00%
Area	"				0.00%

Omni Name	"				0.00%
Cabinet IP	"				0.00%
Items Database Build	Pharmacy, Proj. Managers	1/4/2016	2/15/2016		0.00%
Determine Static Item ID	"				0.00%
Item-Specific Configs Set	"				0.00%
Reformat for Import	"				0.00%
Import!	"				0.00%
Scan Item Barcodes (if applicable)	"				0.00%
Set Pars/Mins/Alarms	"				0.00%
Users Database Build	Pharmacy, Nursing, Proj. Managers	1/18/2016	2/15/2016		0.00%
Determine Access Levels	"				0.00%
Reformat for Import	"				0.00%
Import!	"				0.00%
Interface Testing					
Interface Testing *MILESTONE*	Pharmacy IT/IS, PIS Interface Analyst, OMCL Interface Analyst	2/22/2016	3/4/2016		0.00%
Test Data Transfers	"				0.00%
Test Mapping	"				0.00%
Test Scripts					0.00%
Hardware Implementation					
Product-Specific Tasks					
CSM					
Pre-Implementation 'Web-Based' Training	Pharmacy	1/4/2016	3/14/2016		0.00%
Client to visit https://MyOmnicel.com for CSM Online Tutor	"				0.00%
Omnicell CSM Computer and Equipment Lands Onsite	Freight Co.	3/14/2016	3/14/2016		0.00%
****Week 1 Implemetation** CSM HardW/ SoftW Prep**	Implementation Consultant, Pharmacy	3/14/2016	3/17/2016		0.00%
OmniCenter CSM Database Setups	"	3/14/2016	3/17/2016		0.00%
Areas Database Table	"				0.00%
OmniSupplier Table	"				0.00%
Create OmniSupplier cabinet and set cabinet type to CS	"				0.00%
Day Sheets Table	"				0.00%
CSM Roles	"				0.00%
Add and define CSM User Roles according to required	"				0.00%
Asign CSM End Users to each defined role based on th	"				0.00%
Items Table (New Install- Create Database SV Conversio	"				0.00%
Ensure Items are Valid and Standardized	"				0.00%
Set Witness requirements according to hospital policy (é	"				0.00%
Review Par Levels for CSM	"				0.00%
Ensure all Normal Reorder and Critical Reorder sources	"				0.00%
Set up Safety Stock and ensure barcodes are loaded inté	"				0.00%
Set up item order rounding	"				0.00%
Users Table	"				0.00%
Review Users to ensure required users have access to CS	"				0.00%
Check CSM Witness attributes and roles	"				0.00%
CSM 'Settings' Setup	"				0.00%
Verify Configurations are correct	"				0.00%

Set up Return queue days	"				0.00%
Set up Return queue time window	"				0.00%
Set up Safety Stock	"				0.00%
Create Secondary Inventories	"				0.00%
Assign Expirations Button	"				0.00%
Set up Prepack templates	"				0.00%
CSM Usage Forms	"				0.00%
Create Usage Forms Required by customer	"				0.00%
CSM System Test	"				0.00%
Diagnostics	"				0.00%
Dispense	"				0.00%
Return	"				0.00%
Printing/ Labels	"				0.00%
Receive	"				0.00%
Expired	"				0.00%
CSM Medload	"	3/14/2016	3/17/2016		0.00%
Assign and Load Items	"				0.00%
Assign SafetyStock Barcodes (if applicable)	"				0.00%
Label and add dividers as needed	"				0.00%
****Week 2 Implemetation** CSM Install Completion, Training**	Implementation Consultant, Pharmacy	3/21/2016	3/24/2016		0.00%
Customer Training	"				0.00%
Complete End User CSM Training	"				0.00%
Dispensing/ Returns/ Returns (Automatic/ Manual)	"				0.00%
Return Bin Audit	"				0.00%
Expiration Date	"				0.00%
Cycle Count	"				0.00%
System Admin Tasks	"				0.00%
System Monitoring	"				0.00%
Complete System Adminstator CSM Based Training	"				0.00%
CSM Go Live	"	3/21/2016	3/24/2016		0.00%
Perform a Complete Cycle Count	"				0.00%
Cabinet Normal/ Critical Low Restock Reports	"				0.00%
Complete Setup of CSM Normal/ Critical Low Restock Rep	"				0.00%
Schedule Scheduled Reports	"				0.00%
Exceptions report (include workflow and ensure customer	"				0.00%
Restock Routes	"				0.00%
End of Cycle Transaction Summary	"				0.00%
OmniCenter/CSM Reconciliation Report	"				0.00%
CSM- Unresolved Discrepancies	"				0.00%
Single Sheet- User Form Audit	"				0.00%
Prepack Exception Report	"				0.00%
Post Go Live	"	3/21/2016	3/24/2016		0.00%
Re-Issue Medications with Usage Forms (If needed)	"				0.00%
Complete Normal Cabinet Restock	"				0.00%
Have Go Live letter signed and update Support of new CSM	"				0.00%

Pre-Imp Meeting	Nursing, Pharmacy, OMCL Imp. Specialist	2/22/2016	3/4/2016		0.00%
Establish Nurse Training Schedules	"				0.00%
Establish Pharmacy Training Schedules	"				0.00%
Implementation					
Phase 1 - Hard/Software Setup & Training		3/7/2016	3/10/2016		0.00%
Roll Omni's to Final Location	Freight Co.				0.00%
Uncrate & Inspect Omni's	Freight Co. and/or OMCL Imp. Specialist				0.00%
Establish Connectivity	OMCL Imp. Specialist				0.00%
Set Configs & Enable Licensed Features	"				0.00%
Safety Stock Setup (if applicable)	"				0.00%
External Return Bin Setup (if applicable)	"				0.00%
Flex Lock Setup (if applicable)	"				0.00%
Create Test Items/Patients	"				0.00%
Execute Nurse Trainings	Nursing, OMCL Imp. Specialist				0.00%
Delete Test Items/Patients	OMCL Imp. Specialist				0.00%
Execute PharmTech Training	Pharmacy, OMCL Imp. Specialist				0.00%
Assign Bins	Pharmacy				0.00%
Load Medications and/or Supplies	"				0.00%
Go Live Support	Nursing, Pharmacy, OMCL Imp. Specialist				0.00%
Verficiation of Complete Install	Pharmacy, OMCL Imp. Specialist				0.00%

Omnicell Product Equipment Specifications

67-2031 Rev AJ

Omnicell®

About Omnicell

Omnicell, Inc. (NASDAQ: OMCL) is a leading provider of systems and software solutions targeting patient safety and operational efficiency in healthcare facilities. Since 1992, Omnicell has worked with numerous healthcare facilities to enhance patient safety and allow clinicians to spend more time with their patients.

Omnicell's medication-use product line includes solutions for the central pharmacy, nursing unit, operating room, and patient bedside. Solutions range from large central pharmacy "smart inventory" carousels to small handheld devices. From the point at which a medication arrives at the receiving dock to the time it is administered, Omnicell systems store it, package it, bar code it, order it, issue it, and provide information and controls on its use and reorder.

Our supply product lines provide a healthcare institution with fast, effective control of costs, capture of charges for payor reimbursement, and timely reorder of supplies. Products range from high-security closed-cabinet systems and software to open-shelf and combination solutions in the nursing unit, cath lab, and operating room.

Omnicell's mission is to provide the best customer experience in healthcare, helping hospitals reduce medication errors, operate more efficiently, and decrease costs. For more information, visit www.omnicell.com.

This guide and accompanying software and/or hardware described in it are protected under copyright laws and may not be copied, wholly or in part, without the express written consent of Omnicell, Inc. The same proprietary and copyright notices must be attached to any permitted copies as were attached to the original documents.

Omnicell, Inc.
590 E. Middlefield Rd.
Mountain View, CA 94043
(650) 251-6100
www.omnicell.com

Omnicell and the Omnicell design mark, OmniBuyer, OmniCenter, OmniRx, OmniSupplier, Pandora, PandoraVIA, SafetyMed, SafetyStock, and Sure-Med are registered trademarks. Anesthesia TT, Anesthesia Workstation, Anywhere RN, Executive Advisor, FlexBin, Medication Surveillance, OmniDispenser, OmniLinkRx, OmniScanner, OmniTrack, Omni TT, Open Touch, OptiFlex, OptiFlex MobileTrack, Point-to-Point Medication Safety, ProServ1, SecureVault, See & Touch, SinglePointe, TempCheck, Touch & Go, vSuite, and WorkflowRx are trademarks of Omnicell, Inc. in the United States and internationally. All other trademarks and trade names are the property of their respective owners.

© 2008-2014 Omnicell, Inc. All rights reserved.

Table of Contents

Overview 1-1

Hardware Architecture 1-1

Hardware Requirements 1-1

OmniCenter/Color Touch 2-1

Product List 2-1

Electrical Requirements 2-1

General Requirements 2-1

UPS Protection 2-2

External UPS Protection 2-3

Radiated Emission Level Testing 2-3

Communication Requirements 2-4

Network Requirements 2-4

Remote Access 2-5

Communication Protocols 2-5

Options 2-5

Requirements 2-5

OCRA 2-5

Backup 2-6

Archives 2-6

Cabinet Web Access 2-6

Wireless Specifications 2-7

G4 Platform Wireless Specifications 2-7

G3 Platform Wireless Specifications 2-7

Environment 2-9

General Requirements 2-9

Transport/Storage Conditions 2-9

Temperature 2-9

Heat Dissipation 2-9

Safety/Quality Certifications 2-10

Seismic Specs 2-10

AUX / PC Box Specifications 2-11

Auxiliary Box Specifications 2-11

CT PC Box Specifications 2-12

G4 Platform CTPC Box Specifications 2-12

G3 Platform CTPC Box Specifications 2-13

Savvy Mobile Medication Workstation Specifications 2-14

Savvy External Battery Charger Specifications 2-15

Server Specifications 2-17
Server Configuration 2-17
OmniCenter/Server Minimum Upgrade Requirements 2-17
Dell ™ PowerEdge T320 Base Server - Tower Unit 2-19
Dell ™ PowerEdge R320 Base Server - Rack Unit 2-21
Dell ™ PowerEdge E620 Base + Server 2-23
Virtual Server Specifications 2-25
Pre-18.5 Virtual Server Specifications 2-25
OmniCenter 18.5 Virtual Server Specifications 2-26
Number of Devices 2-26
Key Differences Between Base and Base + Virtual Appliances 2-26
Virtual Machine Configuration 2-27
Minimum Requirements for deploying OmniCenter 18.5 Virtual Appliance (Common to both Base and Base+ deployments) 2-27
Software Requirements 2-29
Medication Label Printer Specifications 2-29
Hardware and Software Requirements 2-29
About the Labels 2-29
Label Care and Handling 2-30
Managing Label Inventory 2-30
SATO and HP Laserjet Printer Specifications 2-30
Space Requirements 2-30
Cabinet Specifications 2-30
External Return Bin 2-31
Cabinet Modules 2-40
Refrigeration Options 2-45
Pharmacy Drawer Modules 2-46
High Security FlexBin Single-Dose Drawers 2-46
High Security Locking Bin Drawers 2-48
Medium Security Sensing Bin Drawers 2-49
Low Security Lighted Matrix and Matrix Drawers 2-50
Drawings 2-52
Three-Cell Cabinet 2-52
Two-Cell Cabinet 2-53
One-Cell Cabinet 2-54
Half-Cell G3 2-55
Half-Cell G4 2-56
OmniRx G3 2-57
OmniRx G4 2-58
OmniTT G3 2-59
OmniTT G4 2-60
Anesthesia Workstation G3 2-61
Anesthesia Workstation G4 2-62

 © 2014 Omnicell, Inc.

WorkflowRx 3-1
Hardware Specifications 3-1
Servers 3-1
WorkflowRx Server Specifications 3-1
Client Hardware (Workstation/Pick Engine) 3-2
Electrical Requirements 3-2
Carousel 3-2
Carousel Computer UPS Specifications 3-2
Packager 3-4
Packager UPS Protection 3-4
Communication Requirements 3-6
Carousel 3-6
Packager 3-6
Environment 3-7
General 3-7
Heat Dissipation 3-7
Seismic Restraints 3-7
Packagers 3-7
Safety/Quality Certifications 3-8
Space Requirements 3-8
Carousel 3-8
JV Medi Packager 3-18
Yuyama Packager 3-19
Modules/Peripherals/Options 3-21
Carousel 3-21
Packager 3-22

OmniLinkRx 4-1
Hardware Specifications 4-1
Servers 4-1
Platform Matrix 4-1
Requirements 4-1
Disk Sizing Tool 4-3
Workstation Requirements 4-4
Faxes 4-4
Digital Type Requirements 4-5
Analog Type Requirements 4-5
Software Requirements 4-5

OptiFlex 5-1
Electrical Requirements 5-1
Communication Requirements 5-1
Network Requirements 5-1
Remote Access 5-2

Environment 5-2
Transport/Storage Conditions 5-2
Heat Dissipation 5-2
Safety/Quality Certifications 5-2
OptiFlex 11+ Computer Equipment Minimum Specifications 5-2
Server Configuration/Database 5-2
Platform Matrix 5-3
Inventory Control Module Computers 5-3
OptiFlex Point of Use Computers 5-3
For Med/Surg software 5-3
For Cath Lab and Surgical Services software 5-4
Optiflex 11.1 Servers 5-4
Client Hardware/Software 5-4
Cabinet Specifications 5-4
Supply Modules 5-5
Scanner Mount 5-5

SecureVault 6-1
Hardware Specifications 6-1
Server Configuration 6-1
Platform Matrix 6-1
Requirements 6-1

Anywhere RN 7-1
System Requirements 7-1
OmniCenter/Server Minimum Requirement 7-1
Color Touch Cabinet Minimum Requirements 7-1
Anywhere RN Remote Workstation Network Requirements 7-1
Minimum Requirement 7-2
Interfaces 7-2
Remote Workstation Requirements 7-2
Recommended Configurations 7-2
Mobile Cart Requirements 7-2
Omnicell Mobile Cart Systems 7-3
Security Notes 7-3
Network Notes 7-3

CSM 8-1
CSM Parts List 8-2
Electrical Requirements 8-2
Communication Requirements 8-3
Network Requirements 8-3
Remote Access 8-3
Environment 8-3
Transport/Storage Conditions 8-3
Heat Dissipation 8-3

 © 2014 Omnicell, Inc.

Safety/Quality Certifications 8-4
Hardware Specifications 8-4
Platform Matrix 8-4
Software/Hardware 8-4
Cabinet Specifications 8-4
Supply Modules and Peripherals 8-5
SATO Label Printer Specifications 8-5

PandoraVIA Hardware Specifications 9-1

Appendix A: Read Height A-1

Appendix B: Seismic Specs B-1

Appendix C: Cybernet iOne H19 Workstation Specifications A-1

Index IN-1

Documentation Feedback FB-1

© 2014 Omnicell, Inc.

Overview

This product specifications document covers all Omnicell hardware products. This document can be used by marketing for quoting to customers in proposals. It can also be referenced by project managers and field engineers for implementation and installation purposes.

Most of the Omnicell hardware products are presented in the OmniCenter/Color Touch chapter. Unique hardware for other products (WorkflowRx, OmniLinkRx, Omnicell Supply Specialty, SecureVault) is covered in subsequent chapters. Refer to the OmniCenter/Color Touch chapter regarding common hardware.

Note: For Pandora hardware specifications, see the PandoraVIA Hardware Requirements Quick Card (PN 67-8028).

Note: Older technologies (SureMed, Blue Screen) that may still be supported, but are no longer sold, are not included in this document.

Hardware Architecture

Omnicell solutions are designed for use in the materials management department, nursing units, pharmacy, and specialty areas.

- Omnicell cabinets provide the convenience and security of a closed system, while also supporting management of external supplies.
- Omnicell pharmacy drawer modules can be installed along with supply zones, to create mixed-use cabinets. This unique option gives clinicians the convenience of a single point of access to both supplies and medications.
- Omnicell carousels and packagers serve in the pharmacy department. Carousels store incoming medications from vendors. Packagers prepare dose packets for delivery to cabinets.
- Mobile carts provide convenience and flexibility for storage and access of supplies and medications. They can be used for bedside applications.

Hardware Requirements

Several site requirements must be met in order for Omnicell hardware to be installed. The following requirement types are listed in each product chapter if applicable:

- Electrical
- Communication
- Environment
- Safety certification
- Hardware parameters

© 2014 Omnicell, Inc.

© 2014 Omnicell, Inc.

OmniCenter/Color Touch

Product List

This chapter contains the following cabinet types that run OmniCenter and Color Touch software:

- One-, two-, three-cell cabinets
- Half cell cabinet
- Mobile supply cart
- OmniRx
- OmniTT, Anesthesia TT
- Anesthesia Workstation
- Savvy Mobile Medication Workstation

Optional cabinet modules and pharmacy drawer modules are also included.

Note: Auxiliary cabinets are available for one-cell, two-cell, three-cell, half cell, OmniRx, and OmniTT products. Auxiliary cabinets are connected to the main cabinet and do not have their own user interface.

Electrical Requirements

General Requirements

Omnicell requires the facility to provide electrical service according to Omnicell equipment specifications. The facility is responsible for all electrical and cabling costs.

- One 115V AC outlet for each cabinet control unit and auxiliary unit in North America. For all other countries, consult the local electrical authority.
- All units must be within six feet of an electrical outlet.

Product	Operating Voltage (VAC)	Frequency	Operating Current	Power Consumption	G3 Fuse	G4 Fuse	Phase
One-, two- three- cell cabinets	85 - 264 AR (auxiliary) 90 - 250 AR (Color Touch) G4 one-two-cell Medical grade	50-60 Hz	2 A at 115 V - 230 V	150 W (Aux) 200 W (Color Touch)	4 A	6.3 A	Single
Half-cell, OmniRx, Omni TT	90 - 260 AR (Color Touch) 90 - 260 AR (auxiliary) Medical grade	50-60 Hz	1.25 A at 115 V 0.75 A at 230 V	200 W	4 A	6.3 A	Single
Mobile supply cart	90 - 260 AR Medical grade	50-60 Hz	1.25 A at 115 V 0.75 A at 230 V	200 W	4 A	4 A	Single
Anesthesia Workstation, Anesthesia TT	90 - 260 AR Medical grade	50-60 Hz	1.25 A at 115 V 0.75 A at 230 V	200 W	4 A	6.3 A	Single
Smart Mobile Cart	120VAC / 60Hz (Rio)	50-60 Hz			5 A	5 A	Single

© 2014 Omnicell, Inc.

Product	Operating Voltage (VAC)	Frequency	Operating Current	Power Consumption	G3 Fuse	G4 Fuse	Phase
Savvy Mobile Medication Workstation	90 - 260 AR Medical grade	50-60 Hz	2.5 A at 115 VAC 1.6 A at 230 VAC	200 W	n/a	4 A	Single
OmniCenter Server - Dell™ PowerEdge R320 Base Server	100-240 AR	50-60 Hz	10 A-5 A	1000 W			Single
FlexLock with TempCheck	FlexLock is powered by the cabinet, and no separate power is required						Single

Note: Power and data connections are made to frames at the back right of the computer. The 1-, 2-, and 3-cell computers are 51-55" (129.54 - 139.7 cm) from the floor. Half-cell, OmniRx, and Anesthesia Workstation computers are 44-50" (111.76 -127 cm) from the floor. The OmniRx TT computer in its frame is 15" (38.1 cm) from the surface the TT sits on. Omnicell power cords are 15 feet (4.57 m) long.

The hospital should have its own emergency power source. Omnicell recommends that emergency power be provided to each unit with connections to red plugs.

Cabinets come with internal uninterrupted power supply (UPS) units. Omnicell can also provide external UPS units. See the "UPS Protection" section.

UPS Protection

In order to prevent power problems from damaging the computer, cabinets have a built-in UPS with surge-suppression circuitry. The UPS can provide the computer with up to 20 minutes of power when voltage levels become erratic or fail. The facility is responsible for testing and changing the battery in UPS units.

Note: The battery in the UPS unit must be connected during installation because Omnicell is required to disconnect battery cables prior to shipping. When connecting an OmniCenter server to an external UPS, do not plug the printer or computer monitor into the UPS unit.

Table 2-1 and Table 2-2 describe the UPS parameters for the G4 platform and the G3 platform.

Parameter	Specification
Voltage range	90-250VAC
Frequency	50-60Hz
Average current	1 A
Peak current	6A
Fuse	6.3A/250V Time-lag
Surge ratings:	EN61000-4-5 Level 3
Battery recharge rate	6 (hours)
Battery back-up Time (typical): half load full load	40 minutes 20 minutes
Full time EMI/RF filtering	Yes

Table 2-1. G4 Platform Internal UPS Specifications

 © 2014 Omnicell, Inc.

Parameter	Specification
Voltage range	100-240VAC
Frequency	50-60Hz
Average current	1 A
Peak current	5A – 2.5A
Fuse	4A/250V slow blow
Surge ratings: Nominal surge current Max surge voltage	2500A (8/20µs Impulse) 2kV (1.2/50µs Impulse)
Battery recharge rate	2 – 4 (hours)
Battery back-up Time (typical): half load full load	40 minutes 20 minutes
Full time EMI/RF filtering	Yes
Energy rating	320 joules

Table 2-2. G3 Platform Internal UPS Specifications

External UPS Protection

If customers want to have added runtime in case of a power failure, Omnicell can recommend an external UPS for usage with one- two- three-cell cabinets, Half-cell, OmniRx, OmniTT, Anesthesia Workstation, and Anesthesia TT. The amount of additional time given by the UPS will vary depending on the Omnisupplier for which the UPS is being used. The facility is responsible for testing and changing the battery in UPS units.

Table 2-3 describes the external UPS parameters.

Parameter	Specification
Voltage range	91-145 VAC
Frequency	60 Hz
Peak current	10.1A @ 100V 9.3A/110V 8.6A/120V
Power Protection	Circuit breaker
Battery recharge rate	4-8 hours
Battery back-up Time (typical):	About 2 hours with Anesthesia Workstation (Varies depending on OmniSupplier model and installed options.)
Energy rating	1800 joules

Table 2-3. External UPS Specifications

Radiated Emission Level Testing

Omnicell tests its products for EMI, RFI and susceptibility and conducted emissions. Individual test reports showing test performed and results are in Agile under 62-92xx. Cabinets met Class B radiated emission levels, except for Savvy which is a Class A product.

Products are compliant with the following tests:

- "VCCI V-3(2010-04)

- "FCC §15.307 Conducted Emissions
- "FCC §15.305 Radiated Emissions
- "Electrostatic Discharge (EN 61000-4-2)
- "Electrical Fast Transients (EN 61000-4-4)
- "Radiated RF Immunity (EN 61000-4-3)
- "Conducted RF Immunity (EN 61000-4-6)
- "Power Frequency Magnetic Fields (EN 61000-4-8)
- "Surges EN (61000-4-5)
- "EN 60601-1-2 36.202, Immunity
- "Voltage Dips And Interruptions (EN 61000-4-11)
- "CISPR 11 §5.1 Conducted Emissions
- "CISPR 11 §5.2 Radiated Emissions
- "CISPR 11 Standard, Class B or Class A limits
- "ESD (EN 61000-4-2) Air Discharge = +/-8KV, Contact Discharge = +/-6KV

Communication Requirements

Network Requirements

Note: The Omnicell equipment resides on the hospital's network infrastructure, which is responsible for the performance and security of the system. The equipment should be set up behind the facility's firewall. If possible, the equipment should be in an isolated local area network segment or LANS.

However, Omnicell applications do have their own security features. They also support network connections between the cabinets and OmniCenter.

To ensure that the Omnicell system can interface properly with the facility network, the facility must provide:

- LAN or WAN with 100 Mbps or higher is preferred. 10 Mbps is the minimum requirement.
- 802.11 a/b/g WLAN infrastructure and configuration for units requiring this option (Anesthesia Workstation, OmniSuppliers, and OmniRx units.
- Category 5 or higher cabling from the switch to the jack for applicable units.
- One network port for each cabinet and at least one for every OmniCenter or Interface Server (NIC bridging or teaming are options on current server lines).
- One static IP address, subnet mask, and gateway address for each cabinet and at least one for each server.
- DNS or WINS server addresses for name resolution (optional).

 © 2014 Omnicell, Inc.

Remote Access

Communication Protocols

Omnicell primarily operates over TCP/IP and uses Health Level 7 (HL7) v.2.5 interface standards. Socket, FTP and MSMQ protocols are also used.

Options

- vSuite solution is preferred.
- Virtual private network (VPN) solutions are used only if vSuite is not supported.
- T1 for service internet connection is recommended.
- Telephone line with direct inward dial (DID) is seldom used.

Requirements

- Web access on Port 443
- Port 80 for access to cabinets and OmniCenter web, prefer hardwired
- 128 encryption SSL (only for vDirector if used)
- One line per cabinet (if phone used)
- One to four lines per OmniCenter for remote diagnostics (if phone used)

OCRA

OmniCenter Remote Access (OCRA) allows remote access to the OmniCenter system application from any customer-provided computer system (using Windows 95 or higher). The computer system must support Microsoft® Terminal Services (client) software.

OCRA manages individual sessions that may be running at any one time. OCRA can access the OmniCenter Console application through Microsoft Terminal Services (TS) and Terminal Services Client (TSC). Terminal Services is a Windows server-based technology that enables an application to be run on the server, but controlled from a client computer.

The following items are required to operate OCRA:

- OCRA software
- OCRA license
- Omnicell Option Key
- Microsoft Terminal Services Server Client Access License(s)
- Microsoft Windows Server Client Access License(s)

The Omnicell Option Key is encoded with the allowable number of user sessions. Facilities may assign OCRA access to the number of users specified in the purchased OCRA configuration. For example, if the facility purchases rights to 10 User OCRA (Silver), sessions, then 10 individual users can access the OCRA. Omnicell provides setup and configuration instructions, and the software CD. Once OCRA is enabled at the OmniCenter, users can then install the software on the applicable PCs.

The OCRA user account is set up during the manufacturing process.

© 2014 Omnicell, Inc.

Note: Omnicell obtains the Microsoft Terminal Services Client Access License and Microsoft Windows Server Client Access License, then installs the software for all network PC conversions. For more information, see the *OCRA Technical Guide* (P/N 67-3013).

With the exception of an optional hand-held mobile computer or bar code printer, the customer is responsible for the installation and hardware support of this feature.

Backup

The customer is responsible for burning archive data to a CD (tower) and moving data to the network attached storage (NAS). Refer to *Omnicell Implementation Guide* (#67-3004) for OmniBackup Checklist and *Omnicell System Software Administration Guide* for the latest procedures.

Archives

The customer is responsible for rotating tapes (tower) and picking up data off the backup table.

Cabinet Web Access

Cabinet web access is an optional feature. The cabinet computer can have an embedded version of Windows XP. OmniExplorer is an optional web extension of OmniCenter, Port 80, and MSMQ. Web access uses a controlled embedded browser.

 © 2014 Omnicell, Inc.

Wireless Specifications

G4 Platform Wireless Specifications

Wireless communication between the cabinets and the OmniCenter is accomplished using Intel's Centrino Advanced N-620 for Desktop adapter. Omnicell also still supports the Asus PCE-N15 adapter. The following table lists the wireless specifications.

Specification	Centrino Advanced-N 6205 for Desktop	PCE-N15
Connector Type	RP-SMA	RP-SMA
Certificates	UL, C-UL, CB (IEC 60950-1), FIPS, FISMA	CE, FCC, C-Tick, IC
Authentication	WPA & WPA2, 802.1X (EAP-TLS, TTLS, PEAP, LEAP, EAP-FAST), EAP-SIM, EAP-AKA	WPA & WPA2
Authentication Protocols	PAP, CHAP, TLS, GTC, MS-CHAP, MS-CHAPv2	None
Encryption	64-bit, 128-bit WEP, AES-CCMP, TKIP	64-bit WEP, 128-bit WEP, AES-CCMP, TKIP
Antenna (Form)	PIFA (enclosed in plastic)	External Dipole (2)
Dimensions H x W x D; Weight	50.85 x 69.53 x 6.37 mm; 40.68g	120.5 x 21.6 x 22 mm; 62.6g
Operating Humidity	50% to 90% non-condensing	5 to 95% non-condensing
Operating Temperature	0 to 80°C	0 to 45°C
Operating System Compatibility	Windows 7 (32-bit), Vista, XP, 8, Linux	Windows 7 (32-bit), Vista, XP, Linux
Manufacturer	Intel	Asus
Operating Frequency	2.4 GHz, 5 GHz	2.4 GHz
Network Compliant Standards	IEEE 802.11 a/b/g/n	IEEE 802.11 b/g/n
Data Transfer Rate	Up to 300 Mbps	Up to 300 Mbps
Interface Type	PCIe	PCIe
Status Indicators	On/Off	Link, Tx/Rx

Table 2-4. G4 Wireless Specifications

G3 Platform Wireless Specifications

Wireless communication between the cabinets and the OmniCenter is accomplished using Cisco's Aironet PCI Adapter (models: 802.11a/b/g and 350 series). The Cisco Aironet 1100 series Access Point (external antenna) is also required. The following table lists the wireless specifications.

Specification	350 Series	802.11a/b/g
Interface Type	Radio-Ethernet	Radio-Ethernet
Connector Type	RP-TNC	not specified
Misc. Compliant Standards	FCC Class B Certified	CSA 22.2 No.950, EN 60950, ICES-003, IEC 60950, UL 60950, VCCI
Encryption Algorithm	128-bit WEP, 40-bit WEP, WPA, TKIP	128-bit WEP, 40-bit WEP, WPA, WPA2, AES, TKIP
AUTHENTICATION MSCHAP V2, EAP-TLS, EAP-TTLS, EAP-SIM	LEAP, EAP-FAST, PEAP-GTC, PEAP	EAP-FAST, Cisco LEAP, PEAP-GTC, PEAP-MSCHAPv2, EAP-TLS

Table 2-5. G3 Wireless Specifications

Specification	350 Series	802.11a/b/g
Antenna (Form)	External, removable 2.2 dBi Dipole (external/detachable)	Integrated dual-band 2.4/5-GHz, 1-dBi, effective-gain antenna on a two-meter cable Access Point (external/detachable)
Dimensions H x W x D; Weight	3.9" x .5"x 6.6"; .2 lbs	3.1" x 4.7" (no depth specified); .2 lbs
Humidity Operating Range	10-90%	10-90%
Temperature Operating Range	32° - 131° F	32° - 158° F
Compatibility	PC, MAC, UNIX	PC
Manufacturer	Cisco	Cisco
Country Kits	not specified	Canada, United States
Line Coding Format	CCK, DBPSK, DQPSK	16 QAN, 64 QAM. BPSK, CCK, DBPSK, DQPSK, QPSK
Bandwidth	2.4 GHz	not specified
Network Compliant Standards	IEEE 802.11b; IEEE 802.1x	IEEE 802.11a, b, g; IEEE 802.1x; Wi-Fi certified
Data Transfer Rate	11 Mbps	54 Mbps
Form	Plug-in card	Plug-in card
Interface Type	PCI	PCI
Max Range: indoors / outdoors	350 ft / 2000 ft	410 ft / 2000 ft
Spread Spectrum Method	DSSS	DSSS, OFDM
Status Indicators	Link Activity, Link OK	Link Activity, Port Status
Networking Type	Network adapter	Network adapter
Support Type	Limited lifetime warranty	Limited 1 year warranty
Slot Requirements: qty, type	1, PCI	1, PCI
Software	not specified	Drivers and utilities
Minimum Operating System	Apple MacOS 9.x, Apple MacOS X, Linux, Microsoft DOS, Microsoft Windows 95/98, 98SE/2000/ME/XP/ CE .NET/CE .NET 4.1/CE 2.11/CE 3.0/NT 4.0	MS Windows 2000/ XP (32-bit)
Antenna with FCC Configuration	Access Point 802.11b, g	Access Point 802.11b, g
Frequency Use Indoors	5150-5250 MHz	5150-5250 MHz

Table 2-5. G3 Wireless Specifications

Note: The Cisco Aironet 1100 Series can be powered either locally using the AC-DC power adapter, or over the Ethernet cable when coupled with a device capable of delivering in-line power, such as an in-line power-capable Cisco Catalyst® switch, Catalyst in-line power patch panel, or Cisco Aironet Power Injector. The AC-DC power adapter is included with the access point.

 © 2014 Omnicell, Inc.

Environment

General Requirements

The following environment requirements must be met:

- Adequate ventilation: 4" (10.16 cm) clearance around each Omnicell cabinet (from the wall and other cabinets)
- Adequate air flow
- A floor plan showing the location of where each cabinet is placed

Transport/Storage Conditions

The maximum cabinet humidity exposure should not exceed 80% (without condensation). See the recommended cabinet temperature ranges by item type in the table below. It is the customer's responsibility to maintain room temperature at or below 71°F (22° C). Document areas in the cabinet that are +6°F of the ambient temperature and note not to store sensitive medication in those areas.

Cabinet	Degrees Celsius	Degrees Fahrenheit
Medications	20-25°	68-77°
General Supplies (with brief deviations)	15-30°	59-86°

Temperature

The operating temperature for most Omnicell cabinets is 5 to 35° C. The storage temperature is from -40 to +85° C

Heat Dissipation

Table 2-6 (G4 platform) and Table 2-7 (G3 platform) contain useful information for determining a site's heating and ventilation setup so that room temperatures can be maintained with the cabinets installed.

Cabinet	Heat Dissipation
1-, 2-, and 3-cell	200-600 BTU/hr
Half-cell, OmniRx, OmniTT, Anesthesia TT	200-400 BTU/hr
Anesthesia Workstation	200-400 BTU/hr
Supply Mobile Cart	304-443 BTU/hr

Table 2-6. G4 HVAC Table Heat Dissipation Advisories

Cabinet	Heat Dissipation
1-, 2-, and 3-cell	304-853 BTU/hr
Half-cell, OmniRx, OmniTT, Anesthesia TT	304-443 BTU/hr
Anesthesia Workstation	341-443 BTU/hr
Smart Mobile Cart	819 BTU/hr (max)
Mobile supply cart	304-443 BTU/hr

Table 2-7. G3 HVAC Table Heat Dissipation Advisories

Safety/Quality Certifications

Omnicell cabinets are certified according to the Canadian Standards Association (CSA) and Conformity European (CE) mark standards. They are exempt from Food & Drug Administration (FDA) certifications.

- Omnicell cabinets meet fire protection standards with their CSA and CE certification.
- Omnicell is ISO 9001:2000 compliant.
- The Anesthesia Workstation (AWS) and Supply Mobile Cart (55CTMC) are CSA and CE certified medical electrical equipment/systems, with a medical grade power supply.
- The G4 products are CSA and CE certified medical electrical equipment/systems, with a medical grade power supply.

Seismic Specs

See the California Building Code documents OPA 0331 (1-, 2-, and 3-cell cabinets and OmniRx) in "Appendix B: Seismic Specs" . It contains seismic specifications details. These documents were prepared by Degenkolb Engineers.

Note: The state of California is in the process of approving the seismic specification for the packager.

Go to the following link for the OSHPD pre-approval list:

http://www.oshpd.ca.gov/FDD/Pre-Approval/OPAIndex.pdf

 © 2014 Omnicell, Inc.

AUX / PC Box Specifications

Auxiliary Box Specifications

Cabinets with an auxiliary (aux) box are connected with 25-foot cables to a main cabinet with a CT PC box for communication to the OmniCenter. An aux box does not have direct interface capability.

Item	Omnicell Configuration (Dell part #)
Base System:	Provides power and communication line to OmniSupplier Aux
Output Voltage:	12V and 5V
Max Amps:	5A for 12V; 10A for 12V
Input Voltage:	85-264 VAC
Operating Temperature:	5°C to 35 °C
Storage Temperature:	-40 °C to 85 °C
Dimensions (H x W x D):	6.56″ x 22.5″ x 21.3″ / 16.66cm x 57.15cm x 54.1cm
Feature:	Setting options to connect to external PC or main cabinet.

Table 2-8. Aux Box Specifications

CT PC Box Specifications

G4 Platform CTPC Box Specifications

The G4 CT Console, Rx, and AWS allow direct interface with a cabinet via a touch screen, keyboard, and monitor. They also communicate with the OmniCenter.

Item	Omnicell Configuration
Processor:	Intel® I3-540 CPU at 3.06GHz
Memory:	2GB, DDR3-1333, PC3-10600, CL9, 240PIN, SODIMM
Hard Drive:	320GB, SATA, 16MB, 7200RPM, WD, WD3200AAKS
Operating System:	Microsoft Windows XP Professional, Embedded System, or Microsoft Windows 7 Embedded (32-bit)
Display:	12.1" LCD with LED backlight for CT console 15.0" LCD with LED backlight for Rx and AWS
Video Controller:	Integrated Graphics GMA HD
Ethernet:	One (1) RJ45 10/100/1000 Ethernet port (LAN1, Intel 82578DM) and one (1) RJ45 10/100/1000 Ethernet port (LAN2, Intel 82574L)
Keyboard:	Keyboard, USB, QWERTY
Mouse:	None
Floppy Disk Drive:	None
CD-ROM or DVD-ROM Drive:	None
Sound:	Single speaker
Printer:	Thermal receipt roll printer and optional Label printer
UPS:	Built-in
Notes:	Omnicell proprietary Interfaces for cabinet-internal communication
	Auxiliary proprietary communication ports for external cabinet communications
	Proprietary peripheral ports for External return bin, flex-lock and other devices

Table 2-9. G4 CT PC Box Specifications

 © 2014 Omnicell, Inc.

G3 Platform CTPC Box Specifications

A Color Touch PC box allows direct interface with a cabinet via a touch screen, keyboard, and monitor. It is also communicates with the OmniCenter.

Item	Omnicell Configuration
Base Unit:	OMNISUPPLIER COLOR TOUCH-SUPPLY
	KONTRON EMBEDDED TECHNOLOGY EXTENDED - PM
Processor:	Intel (R) Celeron (R) M processor 1.00GHz
Memory:	1GB 200MHz 128Mx64 DDR SDRAM UNBUFFERED 200 PIN SODIMM
Hard Drive:	160GB SATA, WD1600AAJS
Operating System:	Microsoft Windows XP Professional, Embedded System (32-bit)
Display:	NEC 10.4" LCD
Video Controller:	Intel Extreme Graphics2 controller, LVDS Flat panel and CRT output, up to 32 MByte UMA video RAM
Ethernet:	10/100Base-T Intel ® 82562
Keyboard:	Keyboard, USB, QWERTY
Mouse:	Touch pad, Synaptics, TM-00301-005
Floppy Disk Drive:	None
CD-ROM or DVD-ROM Drive:	None
Sound:	Integrated AC97 controller, mono output amplified to built in speaker
Printer:	Thermal roll printer embedded
UPS:	Built-in
Notes:	Omnicell proprietary Interfaces for cabinet-internal communication
	Auxiliary proprietary communication ports for external cabinet communications
	Proprietary peripheral ports for External return bin, flex-lock and other devices
	USB expansion ports – none (this isn't a general purpose PC)

Table 2-10. CT PC Box Specifications

Savvy Mobile Medication Workstation Specifications

The Savvy Mobile Medication Workstation is used to access all hospital software applications while providing safe and secure transport of medications in patient specific drawers.

Item	Omnicell Configuration
Processor	Intel SP9300 CPU; 2.26 GHz C2D, 6M L2 cache; ultra low power
Memory	4 GB, 800 MHz DDR2 SO-DIMM
Data Storage	80 GB SSD
Operating System	Windows 7 (32-bit)
Display	TFT active matrix with touch screen - 17″ diagonal, 1280x1024 maximum resolution, optional privacy glass
Video Controller	Integrated SXGA 1280 x 1024 32-bit color, 1 external DVI port
Ethernet	1 external 10/100 Mbps Ethernet port
Keyboard	USB, QWERTY, optional sealed keyboard
Mouse	USB, optional sealed mouse
Floppy Disk Drive	None
CD-ROM or DVD-ROM Drive	None
Sound	
Printer	None
Wireless	Intel Centrino Advanced - N6205, 802.11 a/b/g/n; WiFi wireless adapter
USB Ports	2 external USB ports
Power System	
Input Voltage	90-264VAC @ 3.5 A maximum at 115VAC, 1.6A maximum at 230VAC
Output Voltage	120VAC @ 60 Watts maximum
Charger	4 amps maximum
Battery type	Lithium-Ion, hot swappable, up to 18 hrs runtime (1 or 2 batteries, depending on configuration)
Short-Circuit Protection	AC 4 A Fuse, 12 VDC 7 A Fuse, Motor 10 A Fuse, Inverter 5 A Resettable Fuse
Status Indicator	On-screen display; LED indicators at base; LED indicators on each battery case
General	
Base Dimensions	16″ W x 16″ (40.64 cm x 40.64 cm)
Work Surface Area	17″ x 12″ (43.18 cm x 30.48 cm)
Work Surface Height	36″ - 46″ (91.44 cm - 116.84 cm)
Device Height	Adjustable between 55″ (139.7 cm) and 65″ (165.1 cm) (including monitor)
Construction	Cast aluminum and plastic injection
Finish	Powder coat
Wheels	4 swivel (2 locking) casters 5″ (12.7 cm) diameter, polyurethane tread
Approvals	CE/CSA, ULa60601-1, FCC
Drawers	Up to 12 locking drawers with Guiding Lights technology, 3″ (7.62 cm) and 6″ (15.24 cm) deep drawer options

Table 2-11. Savvy Mobile Medication Workstation Specifications

 © 2014 Omnicell, Inc.

Savvy External Battery Charger Specifications

The Savvy External Battery Charger is an optional feature that enables charging the Savvy batteries externally from the cart. Table 2-12 shows the specifications for the Savvy external battery charger.

Model Number:	MMM-HDW-001
Approvals:	TUV, IEC60601-1, FCC
Number of battery slots:	2 independent
Recharge Time	5-6 hours from fully depleted condition
Input Voltage:	100-240VAC @ 3.0 A maximum at 115 VAC, 1.5 A maximum at 230 VAC
Input Frequency:	50Hz/60Hz
Input Current:	3.0A max at 115VAC
Inrush Current:	60A max at 100-240VAC, 25°C
Standby Power Consumption:	Less than 1W
Efficiency:	Higher than 80% at 100-240VAC input and output full load
Rated Output:	16.4VDC ~ 16.6VDC
Charge current:	3800 mA ~ 4200 mA
LED Indication:	OFF: no charging Blinking Orange: Battery is charging Green: Battery is fully charged Red: problem with battery
Leakage Current:	Less than 0.1 mA for Class II
Mechanical Dimensions:	16.75" W (42.55 cm) x 11 " H (27.94 cm) x 7.75" D (19.69 cm) with two batteries installed
Operating Temperature:	0 °C ~ 40 °C
Relative Humidity:	10% ~ 90%
Storage Temperature:	-20 °C ~ 70 °C (non-condensing)
Vibration and Shock:	MIL-STD-810D
Weight:	9 lbs without batteries

Table 2-12. Savvy External Battery Charger Specifications

© 2014 Omnicell, Inc.

Server Specifications

Omnicell delivers the latest models of available hardware. CPU speed, memory size, hard drive size, and other features are improved frequently. The following section describes typical configurations for Omnicell servers.

Server Configuration

The following information applies to the Omnicell server models listed in the table below.

- Microsoft® Windows® 2012 R2 Server and SQL database 2012 Standard Edition
- Multi-site option is supported up to the maximum number of sites and total number of devices connected on a single database.
- Multiple-installation option is supported for up to five (5) CPCs.

Server Type	Omnicell Model	OS/Database	Maximum Cabinets/ Devices Supported*
Base + Physical	Dell PowerEdge E620	Win2012 (64-bit), SQL2012	1,000
Base + Virtual	Virtual Appliance	Win2012 (64-bit), SQL2012	600
Base Physical	Dell PowerEdge R320/T320	Win2012 (64-bit), SQL2012	100
Base Virtual	Virtual Appliance	Win2012 (64-bit), SQL2012	100
Base (Win2008) Physical	Dell PowerEdge R320/T320	Win2008 (32-bit), SQL2008	100
Base (Win2008)** Virtual	Virtual Appliance	Win2008 (32-bit), SQL2008	100

Table 2-13. Server Models for Omnicell 18.5

Note: *In Table 2-13, maximum number of cabinets/devices supported applies only if med order routing is set to PATAREA (patient area only). If med order routing is set to PATROUTE, please consult your Omnicell representative.

**Base Windows 2008 Virtual server ships with Omnicell 18.0. Upgrade to 18.5 occurs at time of installation.

OmniCenter/Server Minimum Upgrade Requirements

- OmniCenter software version must be equal to or greater than the Color Touch cabinets, Open Supply Omnis, Central Pharmacy, and CSM client software versions.
- OmniCenter must be upgraded before cabinets/clients.
- Server purchase required when minimum server software and hardware requirements are not met. Omnicell will assist in the upgrade of customer data as part of the new server installation. Minimum supported versions for upgrade to Omnicell18.5 are:
  - Microsoft® Windows® Server 2008
  - Omnicell 15.1

For purposes of calculating number of devices, device is defined as follows:

- One cabinet = one Color Touch cabinet configured in any mode (pharmacy, supply, pharmacy/supply, NarcVault, Anesthesia, and so on).

- 1 Controlled Substance Management (CSM) = 1 cabinet.
- 1 Central Pharmacy (CP) = 1 cabinet.
- Four (4) Savvy Mobile Medication Workstations = 1 cabinet. For example, 80 Savvy units = 20 cabinets.

OmniCenter can be installed with the following options:

- Single server per hospital site
- Multi-site install (one database for multiple sites)
- Multi-install (one server with separate databases for up to five sites)

 © 2014 Omnicell, Inc.

Dell ™ PowerEdge T320 Base Server - Tower Unit

This is the tower version of the server recommended for customers with 100 or fewer cabinets. The following table contains its specifications.

Item	Omnicell Configuration (Dell part #)
Operating System	Windows Server 2012, Standard Embedded R2 (64-bit) or Windows Server 2008 Standard (32 Bit)
Form Factor	Tower - 5U Rackable
Base Unit	PowerEdge T320, Intel Xeon E-24XX v2 Processors (210-ACDX)
Processor	1 x Intel Xeon E5-2407 v2 - 2.40GHz, 10M Cache, 6.4GT/s QPI, Turbo, 4C, 80W, Max Mem 1333MHz (338-BEBO)
Memory - 16GB	1 x 16GB RDIMM, 1600 MT/s, Low Volt, Dual Rank, x4 Data Width (319-1812)
Network Card	On-Board Broadcom 5720 Dual Port 1 GB LOM (430-4715)
Hard Drive	2 x 146GB 15K RPM SAS 6Gbps 2.5in Hot-plug Hard Drive (342-0427) 6 x 300 GB 10K RPM SAS 6Gbps 2.5in Hot-plug Hard Drive (342-0429)
Hard Drive Controller	PERC H710 Adapter RAID Controller, 512MB NV Cache, Full Height (342-4048)
RAID Controller Configuration	RAID 1 + RAID 10 for H710/H310 (2 + 6 HDDs in pairs) (331-6980)
DVD-ROM Drive	DVD+/- RW, SATA, INTERNAL (318-2215)
Power Supplies	Dual, Hot-plug, Redundant Power Supply (1+1), 495W (331-4603) Power Distribution Board for Hot Plug Power Supplies (331-7658)
Power Cord	2 x NEMA 5 -15P to C13, 15 amp, wall plug, 10 feet / 3 meter (310-8509)
Remote Management	iDRAC7 Express (331-3481)

Table 2-14. Dell PowerEdge T320 Base Server Configuration

© 2014 Omnicell, Inc.

Dell ™ PowerEdge R320 Base Server - Rack Unit

This is the rack version of the server recommended for customers with 100 or fewer cabinets. The following table contains its specifications.

Item	Omnicell Configuration (Dell part #)
Operating System	Windows Server 2012, Standard Embedded R2 (64-bit) or Windows Server 2008 Standard (32 Bit)
Form Factor	1U Rack
Base Unit	PowerEdge R320, Intel Xeon E-24XX v2 Processors (210-ACCX)
Processor	1 x Intel Xeon E5-2407 v2 - 2.40GHz, 10M Cache, 6.4GT/s QPI, Turbo, 4C, 80W, Max Mem 1333MHz (338-BDZR)
Memory - 16GB	1 x 16GB RDIMM, 1600 MT/s, Low Volt, Dual Rank, x4 Data Width (319-1812)
Network Card	On-Board LOM 1GBE (Dual Port for Racks and Towers, Quad Port for Blades) (430-4715)
Hard Drive	2 x 146GB 15K RPM SAS 6Gbps 2.5in Hot-plug Hard Drive (342-0427) 6 x 300 GB 10K RPM SAS 6Gbps 2.5in Hot-plug Hard Drive (342-0429)
Hard Drive Controller	PERC H710 Integrated RAID Controller, 512MB NV Cache, Full Height (342-3529)
RAID Controller Configuration	RAID 1 + RAID 10 for H710/H310 (2 + 6 HDDs in pairs) (331-6980)
DVD-ROM Drive	DVD+/- RW, SATA, INTERNAL (318-2215)
Power Supplies	Dual, Hot-plug, Redundant Power Supply (1+1), 495W (331-4603) Power Distribution Board for Hot Plug Power Supplies (331-7658)
Power Cord	2 x NEMA 5 -15P to C13, 15 amp, wall plug, 10 feet / 3 meter (310-8509)
Remote Management	iDRAC7 Express (331-3481)

Table 2-15. Dell PowerEdge R320 Base Server Configuration

© 2014 Omnicell, Inc.

Dell ™ PowerEdge E620 Base + Server

This is the high capacity server, recommended for existing customers with greater than100 cabinets or new customers projected to have greater than 100 cabinets. The following table contains its specifications.

Item	Omnicell Configuration (Dell part #)
Operating System	Windows Server 2012, Standard Embedded R2 (64-bit) or Windows Server 2008 Standard (32 Bit)
Form Factor	Tower - 5U Rackable
Base Unit	PowerEdge T620, Intel Xeon E-26XX v2 Processors (210-ABVO)
Processor #1	Intel Xeon E5-2637v2 - 3.5GHz, 15M Cache, 8.0GT/s QPI, Turbo, HT, 4C, 130W, Max Mem 1866MHz (338-BCZY)
Processor #2	Intel Xeon E5-2637v2 - 3.5GHz, 15M Cache, 8.0GT/s QPI, Turbo, HT, 4C, 130W, Max Mem 1866MHz, 2nd Proc (338-BDBO)
Memory - 32GB	8 x 4GB RDIMM, 1600 MT/s, Low Volt, Dual Rank, x8 Data Width (319-1810)
Network Card	Broadcom 5720 DP 1GB Network Interface Card (430-4423)
Hard Drive	14 x 146GB 15K RPM SAS 6Gbps 2.5in Hot-plug Hard Drive (342-0427) 18 x 300 GB 15K RPM SAS 6Gbps 2.5in Hot-plug Hard Drive (342-2240)
Hard Drive Controller	PERC H710 Adapter RAID Controller, 512MB NV Cache, Full Height (342-4048)
DVD-ROM Drive	DVD ROM, SATA, INTERNAL (318-6765)
Power Supplies	Dual, Hot-plug, Redundant Power Supply (1+1), 750W (331-4605)
Power Cord	2 x Power Cord, NEMA 5 -15P to C13, 15 amp, wall plug, 10 feet / 3 meter (310-8509)
Remote Management	iDRAC7 Express (331-3481)

Table 2-16. Dell PowerEdge E620 Base + Server Configuration

© 2014 Omnicell, Inc.

Virtual Server Specifications

Virtualization allows the IT administrator to run one or more virtual machines on top of one physical server. Omnicell supports dedicated or hypervisor virtualization using VMware's vSphere [5.x]. This approach eliminates the need for a host or secondary operating system to be installed on the server hosting the virtual machines. It reduces the amount of overhead required to run the virtualization software. For more information about virtualization, see the *Omnicell Virtualization Technical Guide* (67-3074).

Pre-18.5 Virtual Server Specifications

The following are the minimum specifications for the virtual server.

- Omnicell product software version:
  - OmniCenter v14.1 or greater
  - WorkflowRx 6.1 or greater
  - OptiFlex 10.1 or greater
  - Interface Services 5.2 or greater
  - OmniLinkRx 5.5 or greater.
- VMware vSphere v5.x with the following physical infrastructure:
  - Host CPU with Intel Nehalem-based Xeon 5600/3600 Series (Westmere-EP) or higher; To comply with the Microsoft SQL license, the CPU must have one of the following:
    - Six or more cores with hyper threading off
    - Six or more threads with hyper threading on
  - Storage-5,000 IOPS (Input/Output operations Per Second) @ 5ms or less latency
- Omnicell vSuite-proactive monitoring, remote access
- Virtual Appliance specifications:
  - 6 vCPUs
  - 4 GB RAM
  - 1 NIC
  - 1 x 50GB (C:)
  - 1 x 500GB (D:)

    The D: drive is used to store 7 years of historical data in a SQL Server database. The 1TB size provides enough space to store seven years of customer data with our present software version. The customer can choose VMware thick or thin disk provisioning but Omnicell highly recommends using thick disk provisioning.
  - 1 x 12.6GB (E:)
- 4 GB Memory Reservation to Omnicell VM - this memory reservation is required to ensure that VM is always guaranteed of 4GB memory allocated to it so that applications on VM have resources available all the time.
- 24/7 VMware IT Support at customer facility
- Current VMware support contract
- User agreement to comply with the Virtualization Minimum Requirements Policy

OmniCenter 18.5 Virtual Server Specifications

OmniCenter 18.5 Virtual Appliance ships as an all-in-one VM which has Windows Server 2012R2, SQL Server 2012R2 and OmniCenter application pre-installed.

VMware supports Windows Server 2012 Guest Operating System only on ESXi 5.0 Update1 and above. Link to VMware Knowledge Base.

ESX Version	Supported?
ESX 4.x and below	No
ESX 5.0	No
ESX 5.0 Update 1 and above	Yes

Number of Devices

Server Type	Make/Model	OS/Database	Max # of Devices Supported	Multi-Site Support	Multi-Installation Support
Base + Virtual	Virtual Appliance	Win 2012R2 (64-Bit), SQL 2012	600	Yes	Yes - Max 5 CPC
Base Virtual	Virtual Appliance	Win 2012R2 (64-Bit), SQL 2012	100	Yes	Yes - Max 5 CPCs
Base (Win2008)** Virtual	Virtual Appliance	Win2008 (32-bit), SQL2008	100	Yes	Yes - Max 5 CPCs

Note: *In Table 2-13, maximum number of cabinets/devices supported applies only if med order routing is set to PATAREA (patient area only). If med order routing is set to PATROUTE, please consult your Omnicell representative.

**Base Windows 2008 Virtual server ships with Omnicell 18.0. Upgrade to 18.5 occurs at time of installation.

For purposes of calculating number of devices, device is defined as follows:

- One cabinet = one ColorTouch cabinet configured in any mode (pharmacy, supply, pharmacy/supply, NarcVault, Anesthesia, and so on).
- 1 Controlled Substance Management (CSM) = 1 cabinet
- 1 Central Pharmacy (CP) = 1 cabinet
- Four (4) Savvy Mobile Medication Workstations = 1 cabinet. For example, 80 Savvy units = 20 cabinets.

Key Differences Between Base and Base + Virtual Appliances

	Base VA	Base + VA
vCPU	4	8
SQL 2012R2 License	Licensed for 4 Cores	Licensed for 8 Cores
vRAM	16 GB	32 GB
Virtual Disks (thin provisioning OK)	C: 50 GB, D: 500 GB, E: 32 GB	C: 50 GB, D: 500 GB, E: 500 GB, F: 50 GB

 © 2014 Omnicell, Inc.

Virtual Machine Configuration

OmniCenter Base Virtual Appliance Configuration - up to 100 Cabinets		
Processor	4 vCPU	1 Socket x 4 Cores
Memory	16 GB RAM	With provision to increase memory to VM if needed
NIC	1 NIC	With adapter type set to VMXNET3
Disk Space C:	50 GB	For OS and MSMQ
Disk Space D:	500 GB	For app and SQL - with an option to extend up to 1024 MB (1 TB) to support 7 years historical data. Customer should ensure that sufficient space exists for expansion up to 1 TB on LUN where OmniCenter Virtual Appliance is being deployed
Disk Space E:	32 GB	For Windows Pagefile. Customers who use SAN replication mechanism can deploy this VMDK file on storage which is not replicated.

OmniCenter Base +Virtual Appliance Configuration -up to 600 Cabinets		
Processor	8 vCPU	1 Socket x 8 Cores
Memory	32 GB RAM	With provision to increase memory to VM if needed
NIC	1 NIC	With adapter type set to VMXNET3
Disk Space C:	50 GB	For OS and MSMQ
Disk Space D:	500 GB	For app and SQL Production Databases - with an option to extend up to 2048 GB (2 TB). Customer should ensure that sufficient space exists for expansion up to 2 TB on LUN where OmniCenter Virtual Appliance is being deployed
Disk Space E:	500 GB	For SQL Historic/Archive Database and SQL Full and Transaction Log Backups with an option to extend up to 1024GB (1 TB) to support 7 years historical data.
Disk Space F:	50 GB	For Windows Pagefile. Customers who use SAN replication mechanism can deploy this VMDK file on storage which is not replicated

Minimum Requirements for deploying OmniCenter 18.5 Virtual Appliance (Common to both Base and Base+ deployments)

ESXi Version	ESXi 5.1 Update 1 and above	VMware supports Windows Server 2012 only on ESXi 5.0U1 and above. Link to VMware Knowledge Base.
ESX Host - Processor	Intel Xeon 5600/3600 (Westmere) series or higher	Intel Xeon E5-2440 (SandyBridge family) or Intel Xeon IvyBridge family is highly recommended.
ESX Host - Power Management	Ensure BIOS setting for power is configured for "maximum performance"	
Virtual Machine - Hardware Version	Ensure VM is upgraded to latest Virtual Machine Hardware Version. ESXi 5 VM Hardware version is 8. ESXi 5.1 VM Hardware Version is 9, ESXi 5.5 VM Hardware Version is 10	To support backward compatibility (for those customers still on ESXi 5U1), OmniCenter 18.5 Virtual Appliance ships with VM hardware version 8. If customer has later ESXi version they should upgrade VM after deployment by right-clicking on VM and selecting "Upgrade Virtual Hardware" drivers
Virtual Machine - Anti-Virus	Ensure anti-virus exclusions are in place per Omnicell recommendation	Anti-virus exclusions recommended by Omnicell should be adhered to prevent severe performance degradation.
Storage - IOPS requirements	5,000 IOPS (Input/Output Operations per second) @ 5 ms or less latency	Typical workload of OmniCenter can generate up to average IOPS around 3,000 with occasional spikes up to 15,000

Storage - Average Disk Response Time within Windows	Average Disk response time within Windows should be 25 ms or less	Occasional spikes are acceptable.
Storage - Disk latency measurement	After initial deployment of appliance in customer environment but before production use, Omnicell may measure disk response time and IOPS, and document for future reference.	Should any performance issue occur post production deployment due to changes in customer virtual infrastructure, Omnicell will refer to this value to customer IT before troubleshooting any performance issues.
Storage - Disk provisioning	Thin or Thick	Thick disk provisioning recommended.
Storage - LUN recommendation	OmniCenter VM is very IO intensive (MSMQ, SQL) and is sensitive to storage / disk latency. Optimal performance is seen when VM is deployed on a LUN with dedicated set of drives.	Omnicell recommends deploying OmniCenter 18.5 Virtual Appliance on a dedicated LUN/DataStore made up on dedicated set of at least 16 or more 10K/15K RPM spindles (disks) regardless of SAN cache size. SAN made up of 7.2K RPM disks is not recommended and should not be used to avoid severe performance degradation and possible unscheduled downtime.
VMware - Support	Customer should have current production support agreement with VMware	Omnicell will help triage any performance issue escalation with VMware, but customer should first open ticket with VMware Technical Support.
Customer - IT Support	24x7 IT Support available at customer facility.	Troubleshooting virtual infrastructure issues can be a complex and time consuming effort. Due to the mission-critical nature of the OmniCenter application, customer should have appropriate resources (VMware Admin, Storage Admin, Windows Admin, Anti-Virus Admin) available for troubleshooting any performance issues with deployed OmniCenter Virtual Machine.
Omnicell - vSuite	Omnicell vSuite proactive monitoring and remote access.	
Omnicell - Virtualization Minimum Requirement policy	Customer agrees to comply with Virtualization minimum requirement policy.	Refer to Page 2 of the document http://www.omnicell.com/sitecore/~/media/Files/PDFs/SVPolicy.pdf

 © 2014 Omnicell, Inc.

Software Requirements

OmniCenter requires:

- One of the following two operating systems (OS):
  - Microsoft Windows Server 2012 R2 (version 18.5 or higher)
  - Microsoft Windows Server 2008 with Service Pack 2 (version 15.2 or higher)

Interface Services require:

- One of the following three operating systems:
  - Microsoft Windows Server 2012 R2
  - Microsoft Windows Server 2008 with Service Pack 2
  - Microsoft Windows Server 2003 with Service Pack 2
- IIS 5.0, 6.0, or 7.0

Medication Label Printer Specifications

The Integrated Medication Label Printer allows nurses to print patient-specific labels during medication issue.

Hardware and Software Requirements

Following are the hardware and software requirements for the Medication Label Printer.

- OmniCenter and Color Touch cabinets running Omnicell 16.0 software or higher. Medication labels can be printed only after the upgrade to 16.0 software.
- Medication Label Printer (APS CP 290) installed and enabled. For procedures on how to install the printer, see the *Medication Label Printer Installation Guide* (67-2111).
- Omnicell 16.0 software
- G4 cabinet consoles—OmniRx or One-, Two-, or Three-cell automated medication dispensing cabinets.
- Windows 7 OS or Windows XP OS
- Medication labels purchased from Omnicell. One medication label roll is provided in the kit. Additional label rolls must be purchased separately from Omnicell.
- SafetyStock
  - Confirm Med option
  - Include bar code on label option
  - 2D scanner if medication bar codes are 2D

About the Labels

The use of labels supplied by Omnicell is required. The labels are custom-sized to support a printer cutter which cuts the labels between prints to provide a superior user experience. The label adhesive is also FDA Title 21 Section 175.105 compliant. Customer deviations from Omnicell product specifications will void Support Service terms.

Label Care and Handling

- For best results, store in a dark, cool, and dry place. Temperature: 60ºF–75ºF, Humidity: 30%–60% Relative Humidity.
- Avoid direct or indirect exposure to sun light.
- Each roll contains the manufacturer's beyond-use date. Label quality is not guaranteed when storage conditions are not met or after beyond-use date.

Managing Label Inventory

- Labels are ordered using the Omnicell spare parts process. The labels are ordered in boxes of 6 rolls per box. The orders are processed by sending an email request to orders@omnicell.com.
- When ordering labels, consider label usage and label beyond-use date. Allow up to 2 weeks for order processing. Omnicell recommends that a 30-day label supply be kept on hand.

SATO and HP Laserjet Printer Specifications

The following specifications are available in Agile:

Part Number	Printer
70-0096	SATO M84 Pro Thermal Printer
70-0167 (P3005DN manufacturer PN)	HP LaserJet P3005dn
70-0167 (P3015DN manufacturer PN)	HP LaserJet Enterprise P3015dn

Space Requirements

The cabinet storage capacity is directly proportionate to the square footage of floor space required for each column. Clearance required for pharmacy drawers is equal to clearance required for supply doors.

Cabinet Specifications

Table 2-17 contains standard cabinet specifications. It includes line item capacity and dimensions. See "Drawings" on page 2-52 for graphic presentation of measurements.

Note: Dimensions might vary slightly in size, due to manufacturing variances. Configurator dimensions might be slightly different to allow for variations.

Width includes screw heads on sides of cabinet. Clearance should be added to make it easy to move the cabinets in and out from the wall. Clearance is also needed for modules mounted on the side of the unit—such as the external return bin (ERB) or SafetyStock scanner. Depth includes the door or drawer handle. Clearances are provided when the door/drawer is open. User access may require even more clearance.

Remember to allow 4" (10.16 cm) clearance around each Omnicell cabinet (from the wall and other cabinets) for adequate ventilation.

Some cabinets are used by Omnicell Supply Specialty and SecureVault. Their part numbers are identified as *OPTIxxx* and *xxxxxSV* respectively.

The pictures in table 2-5 display sample cabinet configurations. Actual configurations and modules may be customized by the hospital. Cabinet weight will vary depending on the configuration.

 © 2014 Omnicell, Inc.

Note: Estimated maximum weight for a cabinet shelf is 30 lb (13.61 kg).

External Return Bin

If an eternal return bin (ERB) is attached to a cabinet, extend the width by both the depth of the bin (8.25”/20.96 cm) and an additional 6.6” (16.76 cm) to allow the ERB door to open fully (14.85”/37.72 cm total). This is the minimum required to allow the bin to open fully. Add additional space as desired for convenient access.

Cabinet	Specifications		Metric
One-cell Color Touch G3 (Shown with 9-drawer pharmacy carrier) 	Model #: Item capacity:	OSCT104, OSCT104RX, OPTI1CT 96 to 1744 (8 items per shelf, max. 12 shelves or 18 drawers/2 shelves)	
	W x H x D: Min. width with ERB Clearance: Screen height: Screen size: Weight: Shelf (W x L): (minimum spacing)	26.75” x 77.555” x 24.47” 41.6” 48” depth to include door swing 56” 10.5” Color Touch 500 lbs empty; varies by configuration 22.75” x 21-22” 3.25” (between light bars) 4.5” (between shelves)	69.1 x 196.9 x 62.5cm 105.67 cm 121.92 cm 142.24 cm 26.67 cm 226.8 kg 59.79 x 53.34-55.88 cm 8.26 cm 11.43 cm
One-cell Color Touch G4 	Model #:	SDA-FRM-001, MDA-FRM-001, OPF-FRM-001 (medical electrical equipment)	
	Item capacity:	96 to 1744 (8 items per shelf, max. 12 shelves or 18 drawers/2 shelves)	
	W x H x D: Min. width with ERB Clearance: Screen height: Screen size: Weight: Shelf (W x L): (minimum spacing)	26.75” x 77.555” x 24.47” 41.6” 48” depth to include door swing 56” 12.1” Color Touch 500 lbs empty; varies by configuration 22.75” x 21-22” 3.25” (between light bars) 4.5” (between shelves)	69.1 x 196.9 x 62.5cm 121.92 cm 105.67 cm 142.24 cm 30.74 cm 226.8 kg 59.79 x 53.34-55.88 cm 8.26 cm 11.43 cm

Table 2-17. Cabinet Specifications (1 of 9)

Cabinet	Specifications		Metric
One-cell auxiliary (Pharmacy modules can be added) 	Model #: Item capacity: W x H x D: Min. width with ERB Clearance: Screen height: Weight: Shelf (W x L): (minimum spacing)	0X104, 0PTIX1, 0X104SV 104 to 1752 (8 items per shelf, max. 13 shelves or 18 drawers/3 shelves) 26.75″ x 77.555″ x 24.47″ 41.6″ 48″ depth to include door swing N/A 500 lbs empty; varies by configuration 22.75″ x 21-22″ 3.25″ (between light bars) 4.5″ (between shelves)	 69.1 x 196.9 x 62.5cm 105.67 cm 121.92 cm 226.8 kg 59.79 x 53.34-55.88 cm 8.26 cm 11.43 cm
Two-cell Color Touch G3 (Pharmacy modules can be added) 	Model #: Item capacity: W x H x D: Min. width with ERB Clearance: Space req.: Screen height: Screen size: Weight: Shelf (W x L): (minimum spacing)	0SCT224, 0SCT224RX, 0PTI2CT 216 to 3128 (8 items per shelf, max. 27 shelves or 32 drawers/7 shelves) 51.5″ x 77.555″ x 24.47″ 66.35″ 48″ depth to include door swing 17.33 sq. ft. with door open 56″ 10.5″ Color Touch 750 lbs empty; varies by configuration 22.75″ x 21-22″ 3.25″ (between light bars) 4.5″ (between shelves)	 131.9 x 196.9 x 62.5 cm 168.53 cm 121.92 cm 1.61 sq. m 142.24 cm 26.67 cm 340.19 kg 59.79 x 53.34-55.88 cm 8.26 cm 11.43 cm
Two-cell Color Touch G4 	Model #: Item capacity: W x H x D: Min. width with ERB Clearance: Space req.: Screen height: Screen size: Weight: Shelf (W x L): (minimum spacing)	SDA-FRM-002, MDA-FRM-002, 0PF-FRM-002 (medical electrical equipment) 216 to 3128 (8 items per shelf, max. 27 shelves or 32 drawers/7 shelves) 51.5″ x 77.555″ x 24.47″ 66.35″ 48″ depth to include door swing 17.33 sq. ft. with door open 56″ 12.1″ Color Touch 750 lbs empty; varies by configuration 22.75″ x 21-22″ 3.25″ (between light bars) 4.5″ (between shelves)	 131.9 x 196.9 x 62.5 cm 168.53 cm 121.92 cm 1.61 sq. m 142.24 cm 30.74 cm 340.19 kg 59.79 x 53.34-55.88 cm 8.26 cm 11.43 cm

Table 2-17. Cabinet Specifications (2 of 9)

 © 2014 Omnicell, Inc.

Cabinet	Specifications		Metric
Two-cell auxiliary (Pharmacy modules can be added) 	Model #: Item capacity:	OX224, OPTIX2, OX224SV 224 to 3136 (8 items per shelf, max. 28 shelves or 32 drawers/8 shelves)	
	W x H x D: Min. width with ERB Clearance: Screen height: Weight: Shelf (W x L): (minimum spacing)	51.5″ x 77.555″ x 24.47″ 66.35″ 48″ depth to include door swing N/A 750 lbs empty; varies by configuration 22.75 x 21-22″ 3.25″ (between light bars) 4.5″ (between shelves)	131.9 x 196.9 x 62.5 cm 168.53 cm 121.92 cm 340.19 kg 57.79 x 53.34-55.88 cm 8.26 cm 11.43 cm
Three-cell Color Touch G3 (Pharmacy modules can be added) 	Model #: Item capacity:	OSCT344, OSCT344RX, OPTI3CT 336 to 5280 8 items/shelf max. 42 shelves or 54 drawers/12 shelves)	
	W x H x D: Min. width with ERB Clearance: Screen height: Screen size: Weight: Shelf (W x L): (minimum spacing)	76.25″ x 77.555″ x 24.47″ 91.1″ 48″ depth to include door swing 56″ 10.5″ Color Touch 1000 lbs empty; varies by configuration 22.75″ x 21-22″ 3.25″ (between light bars) 4.5″ (between shelves)	193.675 x 196.99x 62.15 cm 231.4 cm 121.92 cm 142.24 cm 26.67 cm 453.59 kg 57.79 x 53.34-55.88 cm 8.26 cm 11.43 cm
Three-cell Color Touch G4 	Model #:	SDA-FRM-003, MDA-FRM-003, OPF-FRM-003 (medical electrical equipment)	
	Item capacity:	336 to 5280 (8 items/shelf max. 42 shelves or 54 drawers/12 shelves)	
	W x H x D: Min. width with ERB Clearance: Screen height: Screen size: Weight: Shelf (W x L): (minimum spacing)	76.25″ x 77.555″ x 24.47″ 91.1″ 48″ depth to include door swing 56″ 12.1″ Color Touch 1000 lbs empty; varies by configuration 22.75″ x 21-22″ 3.25″ (between light bars) 4.5″ (between shelves)	193.675 x 196.99x 62.15 cm 121.92 cm 231.4 cm 142.24 cm 30.74 cm 453.59 kg 57.79 x 53.34-55.88 cm 8.26 cm 11.43 cm

Table 2-17. Cabinet Specifications (3 of 9)

Cabinet	Specifications		Metric
Three-cell auxiliary (Pharmacy modules can be added) 	Model #: Item capacity: W x H x D: Min. width with ERB Clearance: Screen height: Weight: Shelf (W x L): (minimum spacing)	0X344, 0PTIX3, 0X344SV 344 to 5288 (8 items per shelf, max. 43 shelves or 54 drawers/13 shelves) 76.25″ x 77.555″ x 24.47″ 91.1″ 48″ depth to include door swing N/A 1000 lbs empty; varies by configuration 22.75″ x 21-22″ 3.25″ (between light bars) 4.5″ (between shelves)	 193.675 x 196.99x 62.15 cm 231.4 cm 121.92 cm 453.59 kg 57 .79 x 53.34-55.88 cm 8.26 cm 11.43 cm
Half-cell Color Touch G3—with and without 3-drawer pharmacy carrier 	Model #: Item capacity: W x H x D: Clearance: Work surface height: Screen size: Weight: Shelf (W x L): (minimum spacing)	0S56RXCT 56 items (8 per shelf, max. 7 shelves) or 80-120 items w/3 drawer carrier. 27.9″ x 57.7″ x 26.6″ 48″ depth to include door swing 45″ 12″ Color Touch 360 lb with med drawers and ERB; varies by configuration 22.75″ x 21-22″ 3.25″ (between light bars) 4.5″ (between shelves)	 70.9 x 146.6 x 67.6 cm 121.92 cm 114.3 cm 30.48 cm 226.8 kg 57.79 x 53.34-55.88 cm 8.26 cm 11.43 cm
Half-cell Color Touch G4 	Model #: Item capacity: W x H x D: Clearance: Work surface height: Screen size: Weight: Shelf (W x L): (minimum spacing)	MDA-FRM-004 (medical electrical equipment) 56 items (8 per shelf, max. 7 shelves) or 80-120 items w/3 drawer carrier. 27.9″ x 57.7″ x 26.6″with bumpers 48″ depth to include door swing 45.2″ 15″ Color Touch 360 lb with med drawers and ERB; varies by configuration 22.75″ x 21-22″ 3.25″ (between light bars) 4.5″ (between shelves)	 70.9 x 146.6 x 67.6 cm 121.92 cm 114.81 cm 38.1 cm 234.96 kg 57.79 x 53.34-55.88 cm 8.26 cm 11.43 cm

Table 2-17. Cabinet Specifications (4 of 9)

 © 2014 Omnicell, Inc.

Cabinet	Specifications		Metric
Half-cell auxiliary 	Model #:	56AXRX, 56AX	
	Item capacity;	56 (8 items per shelf, max. 7 shelves) or 80-120 w/3 drawer carrier	
	W x H x D:	27.9″ x 45″ x 26.6″	70.9 x 114.3 x 67.6 cm
	Clearance:	48″ depth to include door swing	121.92 cm
	Work surface height	45″	114.3 cm
	Screen size:	N/A	
	Weight:	360 lb with med drawers and ERB; varies by configuration	226.8 kg
	Shelf (W x L):	22.75″ x 21-22″	57.79 x 53.34-55.88 cm
	(minimum spacing)	3.25″ (between light bars) 4.5″ (between shelves)	8.26 cm 11.43 cm
Supply Mobile Cart G3 This is a half cell with extra features and optional modules. 	Model # (Supply):	SDA-FRM-004	
	Model # (OptiFlex):	OPF-FRM-004 (medical electrical equipment)	
	Item capacity:	56 (8 items per shelf, max. 7 shelves) or 80-120 w/3 drawer carrier	
	W x H x D:	27.9″ x 57.7″ x 26.6″	70.9 x 146.6 x 67.6 cm
	Clearance:	48″ depth to include door swing	121.92 cm
	Work surface height:	45″	114.3 cm
	Screen size:	12″ Color Touch	30.48 cm
	Weight:	207 lbs empty; varies by configuration	93.89 kg
	Shelf (W x L):	22.75″ x 21-22″ (W x D)	57.79 x 53.34-55.88 cm
	(minimum spacing)	3.25″ (between light bars) 4.5″ (between shelves)	8.26 cm 11.43 cm
	Features:	Wireless Battery – 10 hr Analog battery gauge on front Cord loop	
	Optional modules:	Pull out shelf Supply drawer Card reader BioMetric	

Table 2-17. Cabinet Specifications (5 of 9)

Cabinet	Specifications		Metric
Supply Mobile Cart G4	Model # (Supply):	SDA-FRM-004	
	Model # (OptiFlex):	OPF-FRM-004 (medical electrical equipment)	
	Item capacity:	56 (8 items per shelf, max. 7 shelves) or 80-120 w/3 drawer carrier	
	W x H x D:	27.9″ x 57.7″ x 26.6″	70.9 x 146.6 x 67.6 cm
	Clearance:	48″ depth to include door swing	121.92 cm
	Work surface height:	45.2″	114.3 cm
	Screen size:	15″ Color Touch	38.1 cm
	Weight:	207 lbs empty; varies by configuration	93.89 kg
	Shelf (W x L):	22.75″ x 21-22″ (W x D)	57.79 x 53.34-55.88 cm
	(minimum spacing)	3.25″ (between light bars) 4.5″ (between shelves)	8.26 cm 11.43 cm
	Features:	Wireless Battery – 10 hr Analog battery gauge on front Cord loop Medical grade power supply	
	Optional modules:	Pull out shelf Supply drawer Card reader BioMetric	
OmniRx Color Touch G3	Model #:	RXCT	
	Item capacity:	13 drawers (typically 350-450 medications) 3 drawers (typically 80-120 medications)	
	W x H x D:	27.9″ x 57.7″ x 26.9″ with bumpers	70.9 x 146.6 x68.4 cm
	Min. width with ERB	42.75″	108.59 cm
	Clearance:	44″ depth includes drawer extension	111.76 cm
	Work surface height:	45″	114.3 cm
	Screen size:	12″ color touch	30.48 cm
	Weight:	500 lbs empty; varies by configuration	226.8 kg
OmniRx Color Touch G4	Model #:	MDA-FRM-005 (medical electrical equipment)	
	Item capacity:	13 drawers (typically 350-450 medications) 3 drawers (typically 80-120 medications)	
	W x H x D:	27.9″ x 57.7″ x 26.9″ with bumpers	70.9 x 146.6 x 68.4 cm
	Min. width with ERB	42.75″	111.76 cm
	Clearance:	44″ depth includes drawer extension	108.59 cm
	Work surface height:	45.2″	114.81 cm
	Screen size:	15″ color touch	38.1 cm
	Weight:	518 lbs empty; varies by configuration	234.96 kg

Table 2-17. Cabinet Specifications (6 of 9)

 © 2014 Omnicell, Inc.

Cabinet	Specifications		Metric
OmniRx auxiliary	Model #:	RXAX (medical electrical equipment)	
	Item capacity:	13 drawers (typically 350-450 medications) 3 drawers (typically 80-120 medications)	
	W x H x D:	27.9″ x 45″ x 26.9″ with bumpers	70.9 x 115.57 x 68.4 cm
	Min. width with ERB	42.75″	108.59 cm
	Clearance:	44″ depth includes drawer extension	111.76 cm
	Work surface height:	45″	114.3 cm
	Screen size:	N/A	
	Weight:	500 lbs empty; varies by configuration	226.8 kg
OmniRx TT/Anesthesia TT G3	Model #:	TTCT, ANTT	
	Item capacity:	3 drawers (typically 80-120 medications)	
	W x H x D:	26.2″ x 24.7″ x 26.9″ with bumpers	
	Clearance:	44″ depth includes drawer extension	66.55 x 69.85 x 68.4 cm
	Work surface height:	15.5″	111.76 cm
	Screen size:	12″ color touch	39.37 cm
	Weight:	133 lbs without drawers	30.48 cm 52.16 kg
OmniRx TT/Anesthesia TT G4	Model #:	MDA-FRM-006, ANT-FRM-002 (medical electrical equipment)	
	Item capacity:	3 drawers (typically 80-120 medications)	
	W x H x D:	26.2″ x 27.5″ x 26.9″ with bumpers	66.55 x 69.85 x 68.4 cm
	Clearance:	44″ depth includes drawer extension	111.76 cm
	Work surface height:	15.7″	39.88 cm
	Screen size:	15″ color touch	38.1 cm
	Weight:	133 lbs without drawers	52.16 kg
OmniTT auxiliary	Model #:	TTAX	
	Item capacity:	3 drawers (typically 80-120 medications)	
	W x H x D:	26.2″ x 15.5″ x 26.9″ with bumpers	66.55 x 39.37 x 68.4 cm
	Clearance:	44″ depth includes drawer extension	111.76 cm
	Work surface height:	15.5″	39.37 cm
	Screen size:	N/A	
	Weight:	133 lbs without drawers	52.16 kg

Table 2-17. Cabinet Specifications (7 of 9)

Cabinet	Specifications		Metric
Anesthesia Workstation G3 and G3 upgraded	Model #:	ANCT (medical electrical equipment)	
	Item capacity:	13 drawers (typically 350-450 items)	
G3	W x H x D:	38″ x 63.5″ x 30″	96.6 x 161.3 x 76.2 cm
	Clearance:	46″ depth includes drawer extension	116.84 cm
		60″ width for fold-out shelf	152.4 cm
	Work surface height:	46.75″	118.75 cm
	Keyboard height:	51″	129.54 cm
	Screen size:	12″ color touch	30.48 cm
		15″ color touch (upgraded G3)	38.1 cm
	Weight:	500 lbs (empty) - configuration may vary weight	226.8
	Accessories:	Trellis	
		Tape dispenser	
		Gooseneck light	
		Printer	
		Accessory mounting kit	
		iPod compatible speakers	
G3 Upgraded		Sharps bin (13.75″ x 16″ x 7″)	34.93 x 40.64 x 17.78 cm
		Anesthesia supply drawers	
		Power strip	
	Options:	Waste container (13.75″ x 13.5″ x 7″)	34.93 x 34.29 x 17.78 cm
		Tilt bin organizer	
		IV Pole	
		Chart holder	
		External return bin (ERB) (13.25″ x 13″ x 8.25″) (add 6.6″ min for door)	33.66 x 33.02 x 20.96 cm 16.77 cm
		Wireless (802.11 g)	
		Touch and Go/Mag Card reader	
		Fold-out shelf (15″ x 18″)	38.1 cm x 45.72 cm
		Pharmacy drawers	
		50 ft. cable for ERB	15.24 m
		Emergency breakaway panel	

Table 2-17. Cabinet Specifications (8 of 9)

 © 2014 Omnicell, Inc.

Cabinet	Specifications		Metric
Anesthesia Workstation G4	Model #:	ANT-FRM-001 (medical electrical equipment)	
	Item capacity:	13 drawers (typically 350-450 items)	
	W x H x D:	50″ x 63.5" x 30" W=64" with user interface arm extended	127 x 161.3 x 76.2 cm W=162.6 cm with arm extended
	With ERB:	Add 6.6″ to width (W)	16.77 cm
	With fold-out shelf:	Add 15″ to width (W)	38.1 cm
	With trash or sharps bin:	Add 7″ to width (W)	17.78 cm
	Clearance:	46″ depth includes drawer extension	116.84 cm
	Work surface height:	43″	109.22 cm
	Keyboard height:	Variable: 31″ to 48.5″	78.74 cm to 123.19 cm
	Screen size:	15″ color touch	38.1 cm
	Weight:	560 lbs empty; varies by configuration	254.01 kg
	Accessories:	Same as for the AWS G3	
	Options:	Same as for the AWS G3	
Mobile Cart	Model #:	Rio	
	Item capacity:	Drawers 3″ x 6″ x 12″ deep (item count varies)	7.62 x 15.24 x 30.48 cm
	W x H x D:	25″ x 64″ x 25″ (fully raised)	63.5 x 162.56 x 63.5 cm
	Clearance:	37″ depth includes drawer extension	93.98 cm
	Work surface area:	17″ x 12″	43.18 x 30.48 cm
	Work surface height:	33-45″ (adjustable)	83.82 - 114.3 cm
	Base:	16″ x 16″	40.64 x 40.64 cm
	Weight:	110 lbs w/o drawers; 145 lbs with drawers	49.9 kg / 65.77kg
Mobile Cart - Savvy	Model #:	MMM-FRM-001	
	Item capacity:	Up to 12 locking drawers	
	W x H x D:	22″ x H (variable) x 22-32″ Height 52″ - 64″ including monitor Depth = 32″ with keyboard fully extended	63.5 x 154.94 x 63.5 cm 132.08 - 162.56 cm 81.28 cm
	Work surface area:	17″ x 12″	43.18 x 30.48 cm
	Work surface height:	33″ - 45″ (adjustable)	83.82 - 114.30 cm
	Base:	16″ x 16″	40.64 x 40.64 cm
	Weight:	100 - 165 lbs	45.36 -74.85 kg
	Drawer sizes	9″L x 4″W x 3″D 9″L x 4″W x 6″D	22.86 x 10.16 x 7.62 cm 22.86 x 10.16 x 15.24 cm

Table 2-17. Cabinet Specifications (9 of 9)

Cabinet Modules

This section lists Omnicell cabinet module specifications. It includes line item capacity and dimensions.

Module	Specifications		Metric
9-drawer pharmacy carrier	Model #:	OSRXU	
	Item capacity:	9 drawers	
	W x H x D:	1 zone / 5 shelves	
	Weight:	200 lbs (w/o drawers)	90.72 kg
3-drawer pharmacy carrier (shown in a cabinet and a half cell)	Model #:	OS 3DRXU	
	Item capacity:	3 drawers	
	W x H x D:	1 zone (w/o drawers)	
	Weight:	< 100 lbs	< 45.36 kg
OmniDispenser (shown with 3-drawer carrier)	Model #:	ODMPlus3 (includes 3-drawer pharmacy carrier); ODMTall (includes half-door, up to 6 shelves); ODMRx (placed in OmniRx)	
	Item capacity:	Up to 45 small and 24 large cassette dispensers [all]	
	W x H x D:	1 zone / 3 shelves / 6 drawers [by model order]	
	Weight:	<50 lbs (w/o rails) [all]	< 22.68 kg
External return bin (ERB)	Model #:	OERB1	
	Item capacity:	N/A	
	W x H x D:	13.25″ x 13″ x 8.25″	33.66 x 33.02 x 20.96 cm
	Clearance:	14.85″ minimum depth with door open.	37.72 cm
	Weight:	< 50 lbs	50.8 cm
	Placement:	On wall or side of cabinet	< 22.68 kg
	Note:	No minimum height for placement	

Table 2-18. Module Specifications (1 of 5)

 © 2014 Omnicell, Inc.

Module	Specifications		Metric
FlexLock (installed on refrigerator)	Model #:	OCFLTCK	
	Item capacity:	N/A	
	W x H x D:	12″ x 3″ x 6″ approximately	30.48 x 7.62 x 15.24 cm
	Clearance:	Refrigerator specs vary; add 2″ for FlexLock	add 5.08 cm
	Weight:	< 20 lbs	< 9.07 kg
	Note:	See "Refrigeration Options" on page 2-45.	
OmniTrack	Model #:	OT32	
	Item capacity:	32	
	W x H x D:	1 shelf position	
	Weight:	< 20 lbs	< 9.07 kg
Pull-out shelf	Model #:	PS1	
	Item capacity:	8	
	W x H x D:	1 shelf position (22.75″ x 23″ x 4.63″)	57.79 x 58.42 x 11.76 cm
	Weight:	< 50 lbs	< 22.68 kg
Supply drawer	Model #:	OSD24	
	# of bins:	24 maximum	
	Bin W x H x D:	2″ x 4.25″ x 3.75"	5.08 x 10.8 x 9.53 cm
	Drawer W x H x D:	22″ x 21.5″ x 4″ (1 shelf position)	55.88 x 54.61 x 10.16 cm
	Weight:	< 50 lbs	< 22.68 kg
Catheter rack	Model #:	OCR48	
	Item capacity:	48 (4 rails x 12 items each)	
	W x H x D:	2-3 zones	
	Weight:	< 100 lbs	< 45.36 kg
	Note:	Catheter rack is placed in the top zone.	

Table 2-18. Module Specifications (2 of 5)

Module	Specifications		Metric
Suture rack	Model #:	OCR24	
	Item capacity:	24 (3 racks x 8 items each) 2 shelf positions	
	Weight:	< 100 lbs	< 45.36 kg
AWS Tilt Bins - 4 bins	Model #:	ANT-OPT-008	
	Dimensions	23.63"W x 8.13" H x 6.63" D	60.02 x 20.65 x 16.84 cm
AWS Tilt Bins -5 bins	Model #:	ANT-OPT-009	
	Dimensions	23.63"W x 6.5" H x 5.25" D	60.02 x 16.51 x 13.34 cm
AWS Tilt Bins - 6 bins	Model #:	ANT-OPT-010	
	Dimensions	23.63"W x 4.5" H x 3.63" D	60.02 x 11.43 x 9.22 cm

Table 2-18. Module Specifications (3 of 5)

 © 2014 Omnicell, Inc.

Module	Specifications		Metric
Corded bar code scanner (Shown with cradle and goose neck) 	Model #: Extra Spacing: Programming: Applications:	Symbol LS4208 None needed for Anesthesia Workstation, OmniRx, OmniTT or Anesthesia TT; Additional 6″ needed for one-, two-, three-cell cabinets using gooseneck Varies by application Item Scan (for Anesthesia Workstation, TT), SafetyStock (for cabinets)	 add 15.24 cm
Cordless bar code scanner 	Model #: Range: Programming: Applications:	Symbol P370 100 feet Varies by application OmniScanner, OptiFlex, WorkflowRx, and Implant Tracking	 30.48 m
Wireless bar code scanner 	Model #: Range: Programming: Applications:	Symbol MT2070 300 feet Varies by application OmniScanner, OptiFlex, WorkflowRx, and Implant Tracking, CSM	
Cordless bar code scanner 	Model #: Range: Applications: Connection:	Code Reader 2500 300 feet Carts Bluetooth 2.0 + EDR, Class1 Radio, (2.4GHz ~ 2.4835GHz frequency)	 91.44 m
Cordless bar code scanner 	Model #: Range: Applications: Connection:	Code Reader 3500 300 feet WorkflowRx Bluetooth 2.0 + EDR, Class 1 Radio, (2.4GHz ~ 2.4835GHz frequency)	 91.44 m

Table 2-18. Module Specifications (4 of 5)

Module	Specifications	Metric
2D Scanner 	Model #: Symbol DS6708 Imager Applications: Item Scan, SafetyStock	
Touch and Go (Bio ID) PC Box (left) and AWS housing (G3) and G4	Refer to the *Touch and Go Technical Guide* (P/N 67-3014) for system requirements. Note: There are various housings for Touch and Go. The finger pad is used for Touch and Go. There is also a slot for reading magnetic or bar code cards. See card readers in the following table row. Available for Color Touch cabinets; not available for Omnicell Supply Specialty	
Magnetic and bar code card readers Housing for half-cell, OmniTT, OmniRx G3 on left, G4 on right	Refer to the *Omnicell/Omnicell Supply Specialty Card Reader Installation and Configuration Guide* (P/N 67-2006) for system requirements. Note: The card reader uses the same housing as Touch and Go. These modules can be ordered separately or together. The electronics in the housing determine which modules are functional. Omnicell Supply Specialty only uses magnetic card readers. Readers can have two read heights: .4 and.49 inches. See to determine which height to use.	1.02 and 1.24 cm

Table 2-18. Module Specifications (5 of 5)

 © 2014 Omnicell, Inc.

Refrigeration Options

Refrigerators are used with FlexLock or inside cabinets. They must be purchased from a third party. The following table lists compatible free-standing refrigerators (compact and full size).

A half-size refrigerator can take up to two zones in a cabinet, using two shelf positions above it. Using a dorm-size refrigerator inside a cabinet only takes up one zone. Special orders for refrigerator-ready cabinet (with vents for heat dissipation) have a six-week lead time.

Manufacturer	Model	Dimensions (metric)	Volume (metric)	Notes
Kenmore (compact)	#93972	33 7/8" x 18 3/4" x 19 1/8"(86.04 x 47.63 x 48.59 cm)	3.9 cubic ft. (.11 cubic m)	
Kenmore (compact)	#92779	26 3/16" x 18 3/4" x 19 1/8" (66.52 x 47.63 x 48.59 cm)	2.7 cubit ft (.08 cubic m)	black model
Sanyo (compact)	#SR-4310W	33 3/4" x 18 1/2" x 20 1/2"(85.73 x 46.99 x 52.07 cm)	4.4 cubic ft (.12 cubic m)	curved front
Sanyo (compact)	#SR-2570W	25 1/4" x 18 1/2" x 17 1/2"(64.14 x 46.99 x 44.45 cm)	2.5 cubic ft (.07 cubic m)	
Haier (compact)	#HMSE03WAWW	33 1/8" x 18 9/16" x 19 1/2" (84.15 x 47.14 x 49.53 cm)	3.3 cubic ft (.09 cubic m)	
Sunbeam (compact)	#SCR03PMWBW	27 7/10" x 19 4/5" x 19 1/2" (70.36 x50.29 x 49.53 cm)	2.8 cubic ft (.08 cubic m)	
Sunbeam (compact)	#SCR04PMWBW	34 1/2" x 20 1/5" x 19 7/10" (87.63 x 51.3 x 50.04 cm)	3.9 cubic ft (.11 cubic m	
GE (full size)	#GTS18GBSW	67 3/8" x 28" x 32 3/8" (171.13 x 71.12 x 82.25 cm)	18.2 cubic ft (.52 cubic m)	
Whirlpool (full size)	#ER8AHMXRQ	68" x 28" x 31" (172.72 x 71.12 x 78.74 cm)	17.6 cubic ft (.5 cubic m)	
Kenmore (full size)	#27422	59" x 28" x 31" (149.86 x 71.12 x 78.74 cm)	14.1 cubic ft (.4 cubic m)	frost free
Kenmore (full size)	#26442	59" x 28" x 28 1/2" (149.86 x 71.12 x 72.39 cm)	14 cubic ft (.4 cubic m)	frost free
Kenmore (full size)	#26742	64 1/2" x 32" x 26 1/2" (163.83 x 81.28 x 67.31 cm)	17 cubic ft (.48 cubic m)	frost free
Kenmore (full size)	#27042	70 3/4" x 32" x 31" (179.71 x 81.28 x 78.74 cm)	20.6 cubic ft (.58 cubic m)	frost free
Kenmore (full size)	#26082	70" x 32" x 28 1/2" (177.8 x 81.28 x 72.39 cm)	21 cubic ft (.59 cubic m)	
Inglis (full size)	#IT14KXSQ	62 7/8" x 28" x 31" (159.72 x 71.12 x 78.74 cm)	14.4 cubic ft (.41 cubic m)	
Whirlpool (full size)	#ER6AHKXSQ	65 1/2" x 28 3/16" x 30 9/16" (166.37 x 71.6 x 77.62 cm)	15.9 cubic ft (.45 cubic m)	
Whirlpool (full size)	#GR2FHMPQ	66 1/2" x 29 1/2" x 31 1/2" (168.91x 74.93 x 80.01 cm)	21.7 cubic ft (.61 cubic m)	

© 2014 Omnicell, Inc.

Pharmacy Drawer Modules

The combination of an Omnicell cabinet with Omnicell pharmacy modules allows storage and dispensing of supplies and drugs in unit dose forms of:

- Oral solids
- Oral liquids
- IV syringes
- Ampoules
- Vials
- Bulk stock

Drawers fit into one-, two-, three-cell cabinets, OmniRx, OmniTT, and in Anesthesia cabinets. Pharmacy carriers can also be used with one-, two-, three-cell, and half-cell cabinets.

In the measurements (W x H x D), H is the height of the drawer or bin from top to bottom and D is the distance from the front to the back of the drawer or bin.

High Security FlexBin Single-Dose Drawers

The FlexBin Single-Dose Drawer provides a high level of security for medications. With this drawer, access to medications is restricted to the item and quantity chosen by the user. There is no need to confirm the remaining quantity or conduct end-of-shift counts, which results in fewer discrepancies.

Key features of the FlexBin single-dose drawer are

- Single-deep drawer
- Three bin sizes
- Bins can be used for single-dose
- Three drawer configurations: 96 small bins, 48 medium bins, and 48 small/large combo
- Capacity of up to 96 doses

Drawer		Specifications (metric)	Security	Best Use
FlexBin 96 Single Dose 	Model #: # of Bins: Bin W x H x D: Drawer W x H x D: Weight:	MDA-DRW-003 96 1 wide/ 2"x 1" x 1.4" (5.08 x 2.54 x 3.56 cm) 21.5" x 2.5" x 22.5" (54.61 x 6.35 x 57.15 cm) 22.5 lbs [empty] (10.21 kg) Comes with or without lights	High	Ampoules

Table 2-19. High Security FlexBin Drawer Configurations (1 of 2)

 © 2014 Omnicell, Inc.

Drawer		Specifications (metric)	Security	Best Use
FlexBin 3131 Single Dose 	Model #: # of Bins: Bin W x H x D: Bin W x H x D: Drawer W x H x D: Weight:	MDA-DRW-002 48 3 wide/ 6.9" x 1" x 1.5" (17.53 x 2.54 x 3.81 cm) 1 wide/ 2" x 1" x 1.4" (5.08 x 2.54 x 3.56 cm) 21.5" x 2.5" x 22.5" (54.61 x 6.35 x 57.15 cm) 21.5 lbs [empty] (9.75 kg) Comes with or without lights	High	Syringes and ampoules
FlexBin 2222 Single Dose 	Model #: # of Bins: Bin W x H x D: Drawer W x H x D: Weight:	MDA-DRW-001 48 4.4" x 1" x 1.5" (11.18 x 2.54 x 3.81 cm) 21.5" x 2.5" x 22.5" (54.61 x 6.35 x 57.15 cm) 21 lbs [empty] (9.53 kg) Comes with or without lights	High	Vials

Table 2-19. High Security FlexBin Drawer Configurations (2 of 2)

High Security Locking Bin Drawers

Locking bins, suitable for controlled substances, provide a high level of security by restricting access to one pre-selected medication at a time. The tamper-proof metal lids of each bin and audio alerts further ensure the security. Omnicell guideline light technology guides users to the drawer and to the appropriate pre-selected bin within the drawer.

Key features of the locking bin drawers are

- Guiding light technology that provides both drawer location light and lights on individual product bins
- Single and double-deep drawers
- Three bin sizes and drawer configurations: 6 double-deep bins, 12 bins, or 24 bins
- Tamper-proof, locked metal lids
- Supports zone configuration for increased control over pharmacy items
- Capacity of up to 24 line items per drawer

Drawer		Specifications (metric)	Security	Best Use
6-Bin Locking	Model #: # of Bins: Bin W x H x D: Drawer W x H x D: Weight:	OLL6 6 5.7" x 3.6"x 8.1" (14.45 x 9.14 x 20.57 cm) 21.5" x 5.1" x 22.5" (54.61 x 12.95 x 57.15c m) 36 lbs [empty] (16.33 kg)	High	Bulky narcotic boxes or higher PAR items Note: Introduced with G4, but supported on CT 14.6 and higher.
8-Bin Locking	Model #: # of Bins: Bin W x H x D: Drawer W x H x D: Weight:	MDA-DRW-004 8 4 at: 12.79" x 1.8" x 2.92" (32.49 x 4.57 x 7.42cm) and 4 at: 6.1"x 1.8" x 3.4" (15.5 x 4.57 x 8.64 cm) 21.5" x 2.5" x 22.5" (54.61 x 6.35 x 57.15 cm) 31 lbs [empty] (14.52 kg)	High	
12-Bin Locking	Model #: # of Bins: Bin W x H x D: Drawer W x H x D: Weight:	OLL12 12 6.1"x 1.8" x 3.4" (15.49 x 4.57 x 8.64 cm) 21.5" x 2.5" x 22.5" (54.61 x 6.35 x 57.15 cm) 31.5lbs [empty] (14.29 kg)	High	
24-Bin Locking	Model #: # of Bins: Bin W x H x D: Drawer W x H x D: Weight:	OLL241 24 2.7" x 1.8" x 3"(6.86 x 4.57 x 7.62 cm) 21.5" x 2.5" x 22.5" (54.61 x 6.35 x 57.15 cm) 32.5lbs [empty] (14.74 kg)	High	Small quantities

Table 2-20. High Security Locking Bin Drawer Configurations

 © 2014 Omnicell, Inc.

Medium Security Sensing Bin Drawers

Sensing bins, with closed, see-through plastic lids, provide a medium level of control. Special sensors on the bin lids detect bin entry and provide audible and visual feedback to users attempting to open bins for items that have not been preselected. Any unauthorized entry attempts are recorded in the system, thus providing deterrence for inappropriate activity.

Key features of the sensing bin drawers are

- Guiding light technology that provides both drawer location light & lights on individual product bins
- Single and double-deep drawers
- Three bin sizes and drawer configurations: 6 double-deep bins, 12 bins, or 24 bins
- Clear plastic, entry-detecting, sensing lids
- Sensors provide audible and visual feedback
- Capacity of up to 24 line items

Drawer		Specifications (metric)	Security	Best Use
6-Bin Sensing	Model #: # of Bins: Bin W x H x D: Drawer W x H x D: Weight:	OSL6 6 6.1" x 3.6" x 8.1" (15.49x 9.14 x 20.57 cm) 21.5" x 5.1" x 22.5" (54.61 x 12.95 x 57.15 cm) 32 lbs [empty] (14.51 kg)	Medium	Bulky items
10-Bin Return Sensing	Model #: # of Bins: Bin W x H x D: Drawer W x H x D: Weight:	ORD10 10 6.1" x 1.8" x 3.4" (15.49 x 4.57 x 8.64 cm) 21.5" x 2.5" x 22.5" (54.61 x 6.35 x 57.15 cm) 30 lbs [empty] (13.61 kg)	Medium	

Table 2-21. Medium Security Sensing Bin Drawer Configurations

Drawer		Specifications (metric)	Security	Best Use
12-Bin Sensing	Model #: # of Bins: Bin W x H x D: Drawer W x H x D: Weight:	OSL12 12 6.1" x 1.8" x 3.4" (15.49 x 4.57 x 8.64 cm) 21.5" x 2.5" x 22.5" (54.61 x 6.35 x 57.15 cm) 22 lbs [empty] (9.98 kg)	Medium	
24-Bin Sensing	Model #: # of Bins: Bin W x H x D: Drawer W x H x D: Weight:	OSL24 24 2.5" x 1.4" x 3.7" (6.35 x 3.56 x 9.4 cm) 21.5" x 2.5" x 22.5" (54.61 x 6.35 x 57.15 cm) 22 lbs [empty] (9.98 kg)	Medium	Small quantities

Table 2-21. Medium Security Sensing Bin Drawer Configurations

Low Security Lighted Matrix and Matrix Drawers

Matrix drawers are available in two models: lighted and unlighted. The lighted matrix drawer provides a lower security, with increased flexibility. Lights frame the section and guide the user to the preselected medication, reducing the possibility of errors.

Key features of lighted matrix drawers are

- Guiding light technology that provides both drawer location light and lights on individual product bins
- Flexible drawer configurations up to 24 bins
- Adjustable bin dividers
- Single-deep drawer
- Capacity of up to 24 line items

The Matrix drawer is a high-capacity, low-security unlighted drawer that is suitable for large quantities of less-controlled medications.

Key features of matrix drawers are

- Flexible drawer configurations up to 96 bins
- Adjustable bin dividers
- Double-deep drawer 4 dividers
- Single-deep drawer capacity of up to 96 line items

 © 2014 Omnicell, Inc.

Drawer		Specifications (metric)	Security	Best Use
24-Bin Lighted Matrix	Model #: # of Bins: Bin W x H x D: Bin W x H x D: Drawer W x H x D: Weight:	0LMD24 4-24 10" x 1.8" x 9.2" (max.) (25.4 x 4.57 x 23.37 cm) 4.9" x 1.8" x 2.9" (min.)(12.45 x 4.57 x 7.37 cm) 21.5" x 2.5" x 22.5" (54.61 x 6.35 x 57.15 cm) 20 lbs [empty] (9.07 kg)	Low	
96-Bin Matrix	Model #: # of Bins: Bin W x H x D: Bin W x H x D: Drawer W x H x D: Weight:	0MD48 4-96 9.2"(max.) x 1.8" x 10" (23.37 x 4.57 x 25.4 cm) 2.4" x 1.8" x 1.4" (min.)(6.1 x 4.57 x 3.56 cm) 21.5" x 2.5" x 22.5" (54.61 x 6.35 x 57.15 cm) 20 lbs [empty] (9.07 kg)	Low	
4-Bin Double Deep	Model #: # of Bins: Bin W x H x D: Drawer W x H x D: Weight:	0MD4 4 9.75" x 4" x 4.5" (24.77 x 10.16 x 11.43 cm) 21.5" x 5.1" x 22.5" (54.61 x 12.95 x 57.15 cm) 30 lbs [empty] (13.61 kg)	Low	IV Bags
Single Deep Anesthesia	Model #: # of Bins: Bin W x H x D: Drawer W x H x D: Weight:	0ASD Up to 22 20″ x 1.7″ x 18.5″ [max] (50.8 x 4.32 x 46.99cm) 21.5″ x 2.5″x 22.9″ (54.61 x 6.35 x 58.17cm) 15.5 lbs [empty] (7.03 kg)		
Double Deep Anesthesia	Model #: # of Bins: Bin W x H x D: Drawer W x H x D: Weight:	0ASD2 Up to 13 19.9″ x 4.1″ x 17.9″ [max] (50.55 x 10.41 x 45.47 cm) 21.5 x 4.9″″ x 22.9″ (54.61 x 12.446 x 58.166cm) 25 lbs [empty] (11.34 kg)		
Triple Deep Anesthesia	Model #: # of Bins: Bin W x H x D: Drawer W x H x D: Weight: Supports weight of:	0ASD3 Up to 13 19.75″ x 5.25″ x 17.75″ (maximum) 21.5″ x 7.75″ x 22.9″ 42 lbs [empty] (19.05 kg) 50 lbs		

Table 2-22. Low security matrix drawer configurations

Drawings

This section contains the drawings of various cabinets with physical specifications.

Three-Cell Cabinet

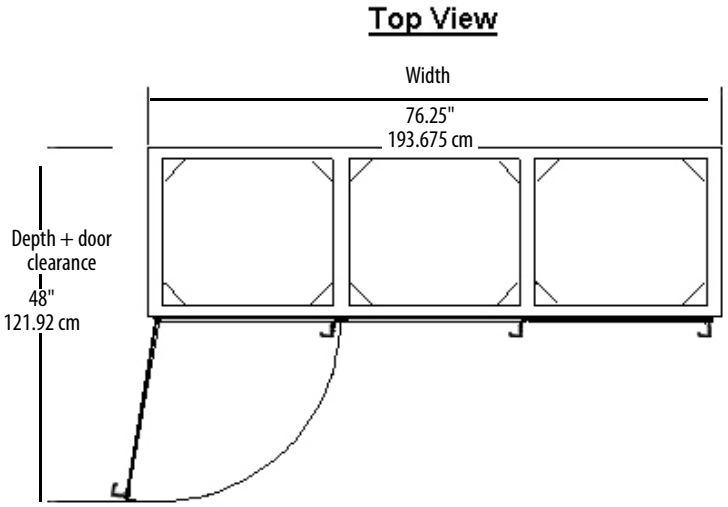

Note: With external return bin, add minimum 14.85″ (37.72 cm) to allow bin to open. Add additional clearance as needed for convenience.

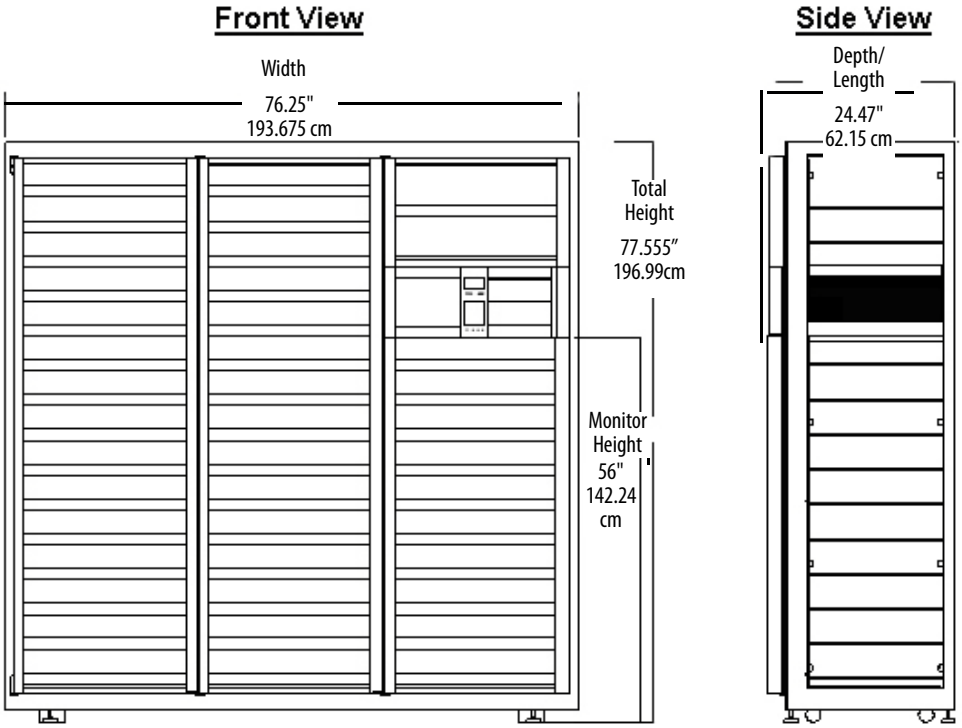

 © 2014 Omnicell, Inc.

Two-Cell Cabinet

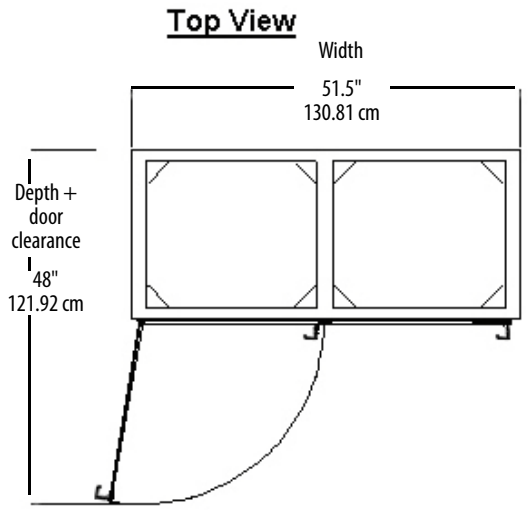

Note: With external return bin, add minimum 14.85" (37.72 cm) to allow bin to open. Add additional clearance as needed for convenience.

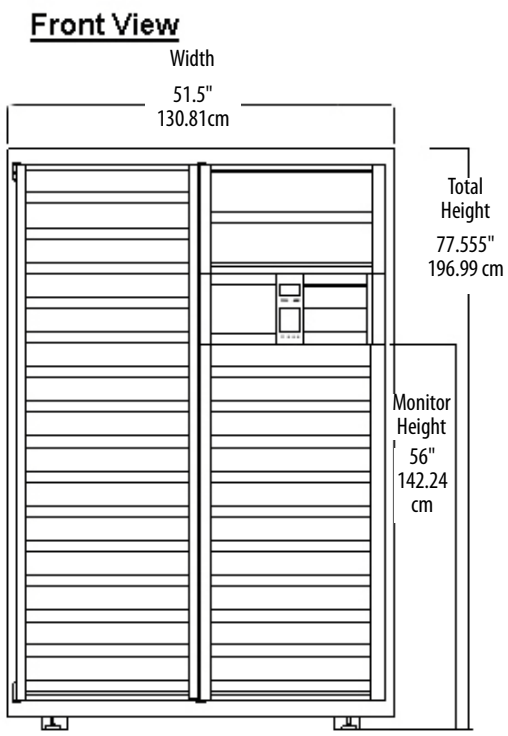

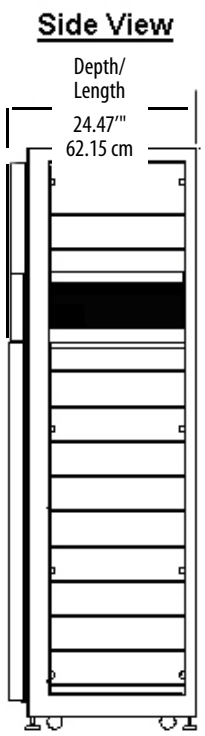

One-Cell Cabinet

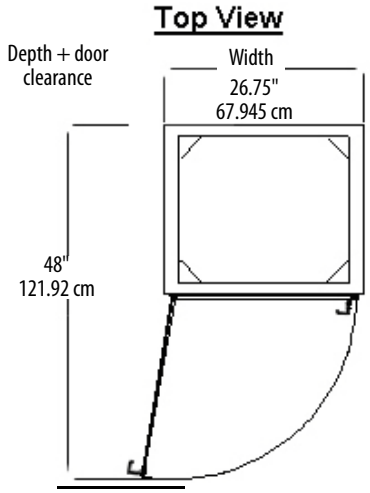

Note: With external return bin, add minimum 14.85" (37.72 cm) to allow bin to open. Add additional clearance as needed for convenience.

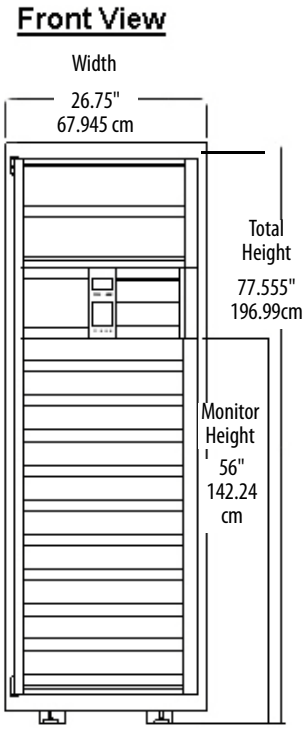

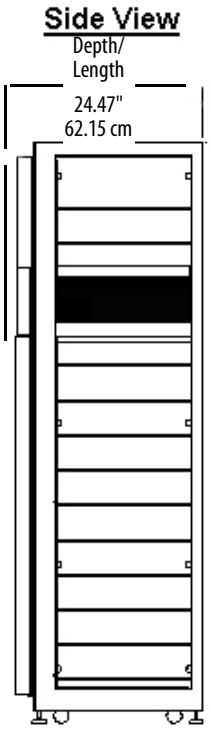

 © 2014 Omnicell, Inc.

Half-Cell G3

Note: The Supply Mobile Cart has the same dimensions, with shelves instead of drawers.

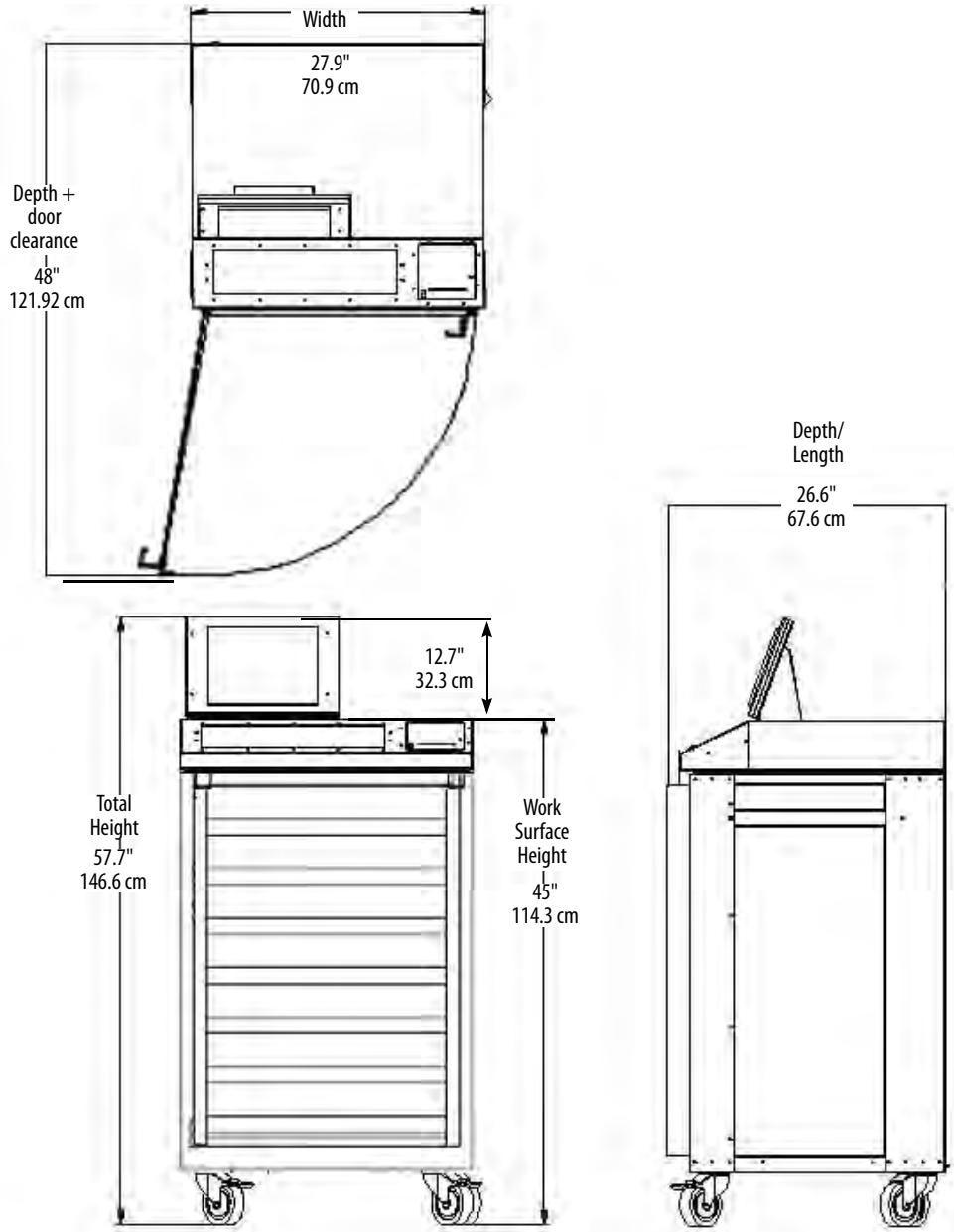

Half-Cell G4

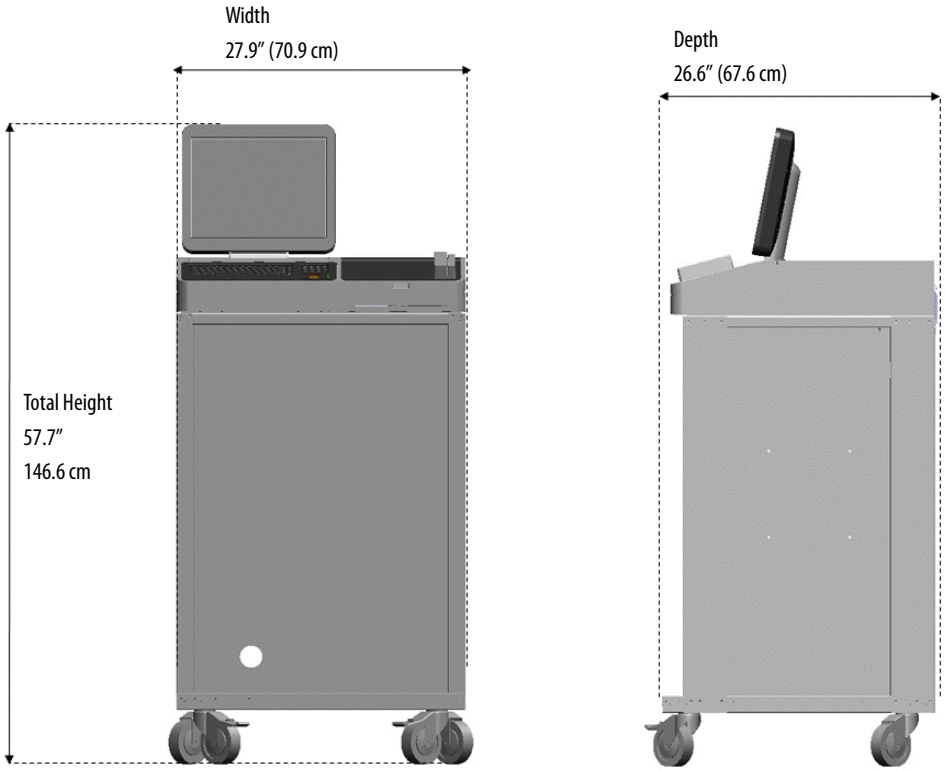

 © 2014 Omnicell, Inc.

OmniRx G3

Note: The Supply Mobile Cart has the same dimensions, with shelves instead of drawers.

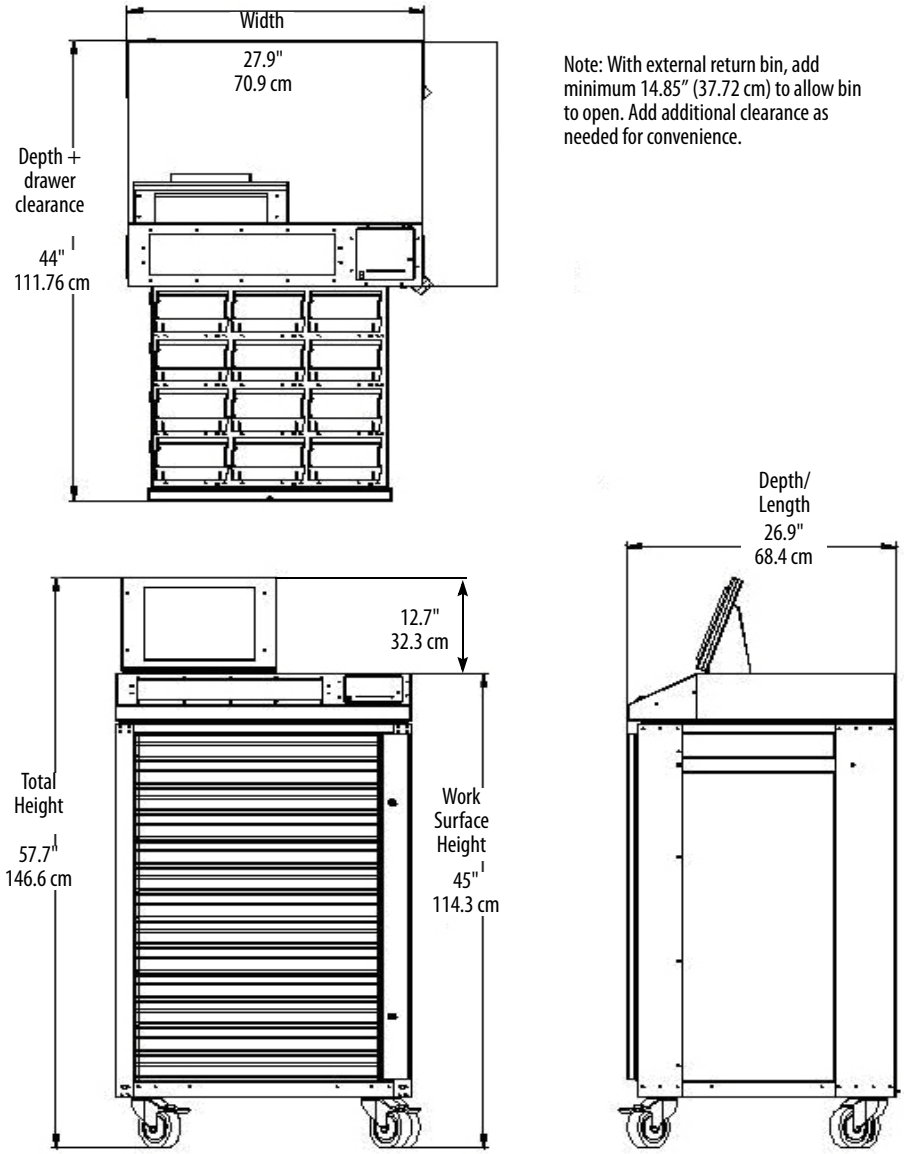

OmniRx G4

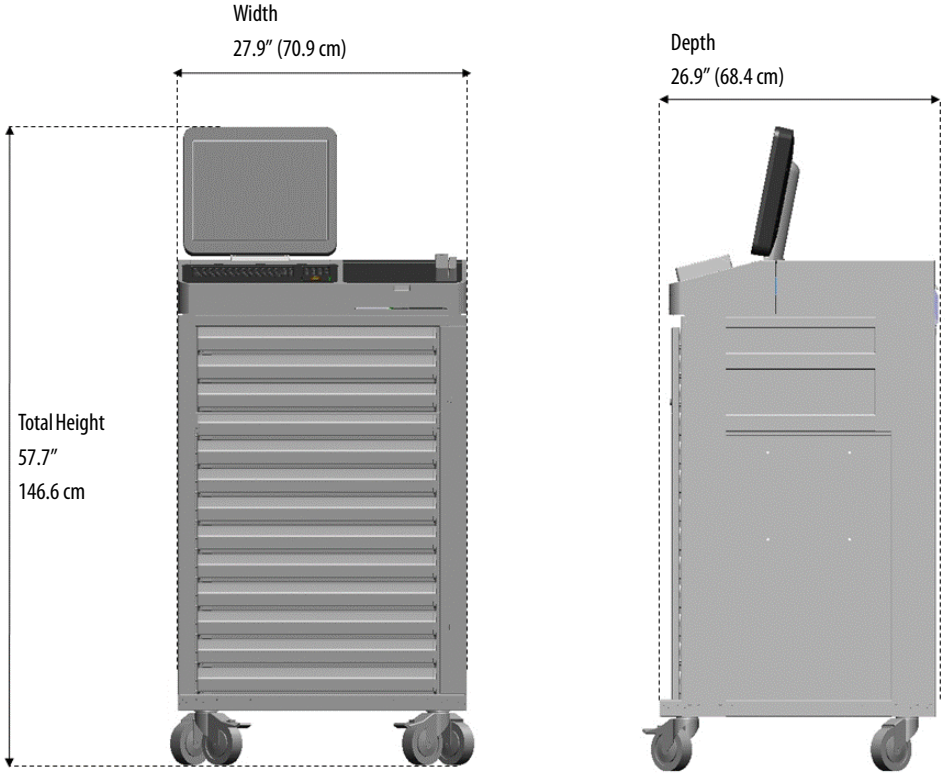

Note: With external return bin, add minimum 14.85" (37.72 cm) to allow bin to open. Add additional clearance as needed for convenience.

 © 2014 Omnicell, Inc.

OmniTT G3

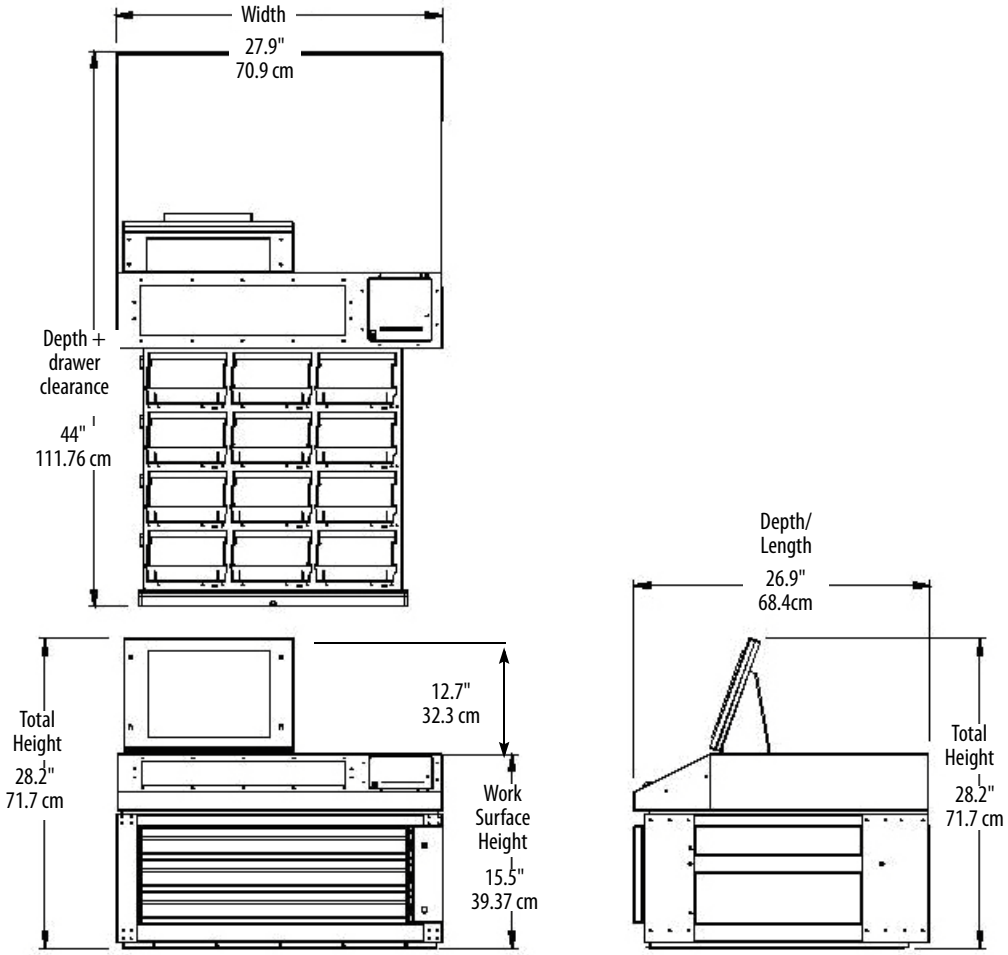
Width
27.9"
70.9 cm
Depth +
drawer
clearance
44"
111.76 cm
Total
Height
28.2"
71.7 cm
12.7"
32.3 cm
Work
Surface
Height
15.5"
39.37 cm
Depth/
Length
26.9"
68.4cm
Total
Height
28.2"
71.7 cm

OmniTT G4

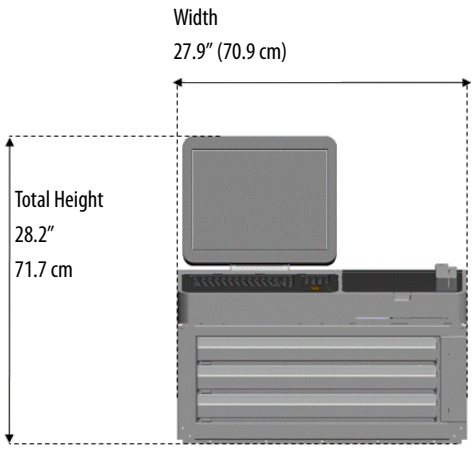

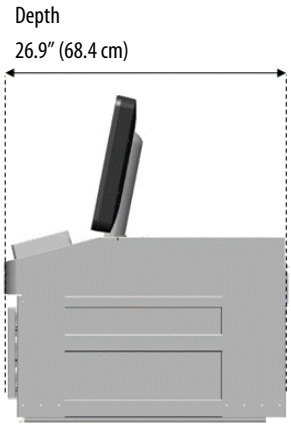

 © 2014 Omnicell, Inc.

Anesthesia Workstation G3

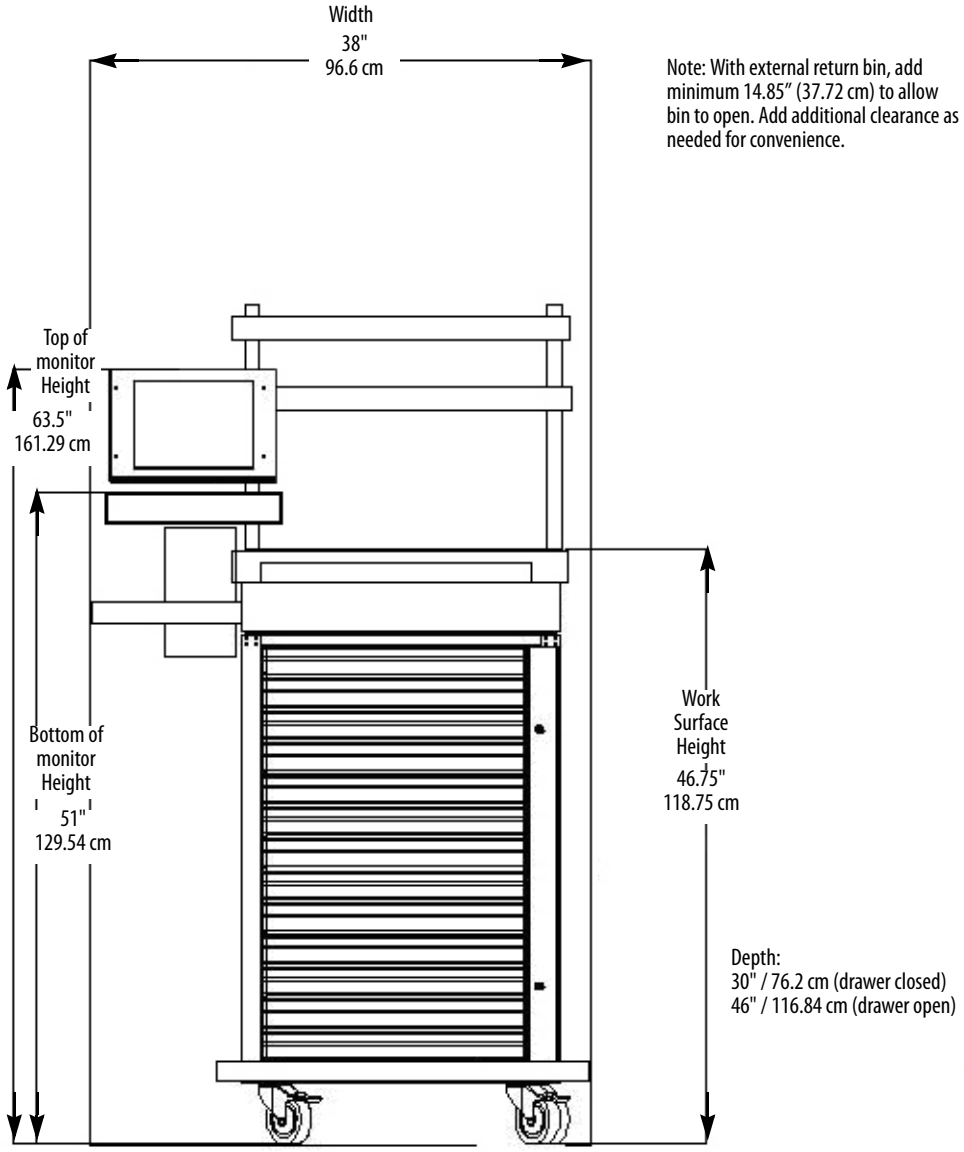

Anesthesia Workstation G4

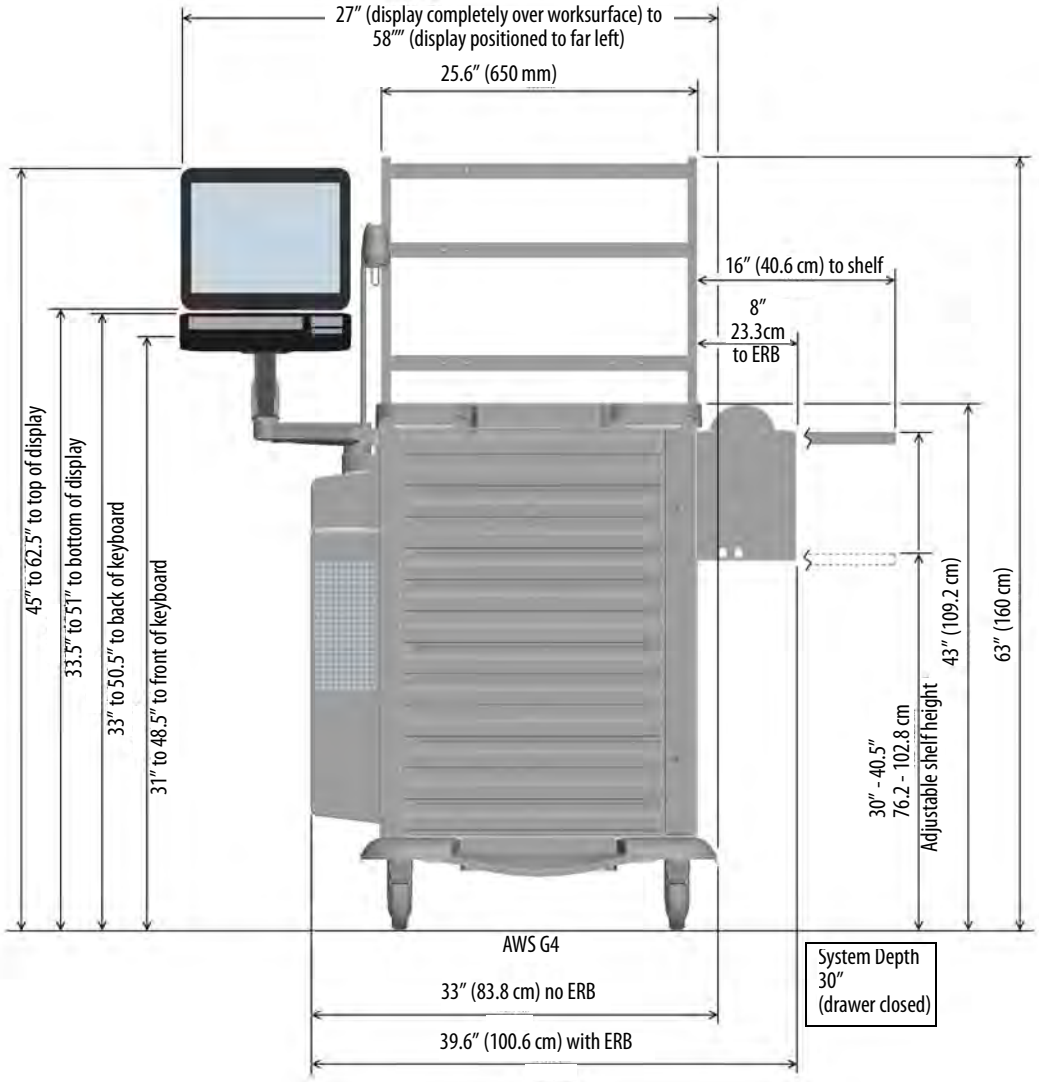

Note: With external return bin, add minimum 14.85″ (37.72 cm) from side of cabinet to allow bin to open. Add additional clearance as needed for convenience.

 © 2014 Omnicell, Inc.